Chapter 5

Modeling and Analysis of Fluid-Thermal-Structure Coupling Problems for Hypersonic Vehicles

Fang Chen, Shengtao Zhang and Hong Liu

Additional information is available at the end of the chapter

http://dx.doi.org/10.5772/intechopen.70658

Abstract

To efficiently model fluid-thermal-structural problems for thermal protection design of hypersonic vehicles, a framework of Hypersonic Computational Coupling Dynamics (HyCCD) software integrates an independently developed program solving hypersonic aerthermodynamic simulation with a finite element analysis professional software. With the mathematical and physical description of multi-physics coupling mechanism, the corresponding efficient coupling strategies were proposed. Some representative coupling problems encountered in hypersonic vehicle were systematically analyzed to study the intrinsic fluid-thermal-structural coupling characteristics and mechanisms. The results can theoretically and technically support the studies on comprehensive performance assessment and optimization of thermal protection system and static or dynamic aero-thermoelastic problem of hypersonic vehicles.

Keywords: hypersonic vehicle, multi-physics coupling, aerothermodynamics, aerothermoelasticity, thermal protection system

1. Introduction

In recent years, with the ramjet engine matures and scramjet engine has achieved remarkable progress, a new-generation hypersonic vehicle powered by air-breathing engine has attracted widespread concerns in the international community and has become the focus of the future development in the field of aerospace. However, the development of this new generation air-breathing hypersonic vehicle faces many new key issues and requires great progresses in aerodynamics, structure thermal protection, propulsion technology and flight control [1, 2].

The sustained long-range maneuverable flight in the near-space atmosphere within a wide Mach range makes the experience of aerodynamic environment surrounding the hypersonic

vehicles extremely complicated, which is characterized as complex flow fields, high enthalpy and long duration aeroheating with medium/low heat flux. Also, the interaction between the aerodynamic force/aeroheating flux of the external flow field and the heat transfer/thermal stress/deformation and other physical field of the internal physical field in the thermal protection system (TPS) will become extremely strong. Furthermore, the massive application of lightweight flexible materials and large thin-walled structure, especially the flight control rudder and other components will lead to another problem of aerothermoelasticity [3], which should consider the influence of sustained aeroheating. Therefore, the coupling between multi-physics such as flow field, heat and structure should be taken into account for a new-generation air-breathing hypersonic vehicle with the ability of hypersonic long-range maneuverable flight in the near-space atmosphere.

This chapter is to systematically study and analyze the coupling characteristics and mechanism of multi-physics coupling problems such as fluid-thermal-structural coupling of hypersonic vehicle, to construct a reasonable multi-physics coupling model, and to propose effective coupling analysis strategy based on computational fluid dynamics (CFD), computational thermodynamics (CTD) and computational structural dynamics (CSD), so as to provide theoretical support and analysis tools for further study of non-ablative thermal protection, aerothermoelasticity and other key issues. The following sections will focus on the modeling and analysis of several representative multi-physics coupling problems encountered on the fuselage, inlet, and wing of hypersonic vehicles.

2. The description of multi-physics coupling problem

As shown in **Figure 1**, the multi-physics coupling problem mainly involves fluid and solid in which a complex physical process takes place between aerothermodynamics within the fluid and thermo-structural dynamics within the solid through a fluid-solid coupling interface. From the view of systematic engineering, the multi-physics coupling problem constitutes a multi-physics, multi-size, and multi-variable coupling system with high coupling complexity. In the coupling system, aerothermodynamic is the active motivation including the coupling of aerodynamic force and aerodynamic heat, while the thermo-structural dynamics is the passive response including the coupling of heat transfer, thermal stress and deformation.

The high complexity of multi-physics coupling problems makes it very difficult to establish a complete coupling model simultaneously considering all the coupling relations and factors. It is necessary to split the problem into different coupling levels according to physical environment characteristics and the engineering application background. For the blunt leading edge and the fuselage with large heat insulation areas with large rigidity, the structural deformation is relatively weak and can be ignored so that the multi-physics coupling problem can reduce to fluid-thermal coupling problem or fluid-solid conjugate heat transfer problem. However, the structural deformation of some structures

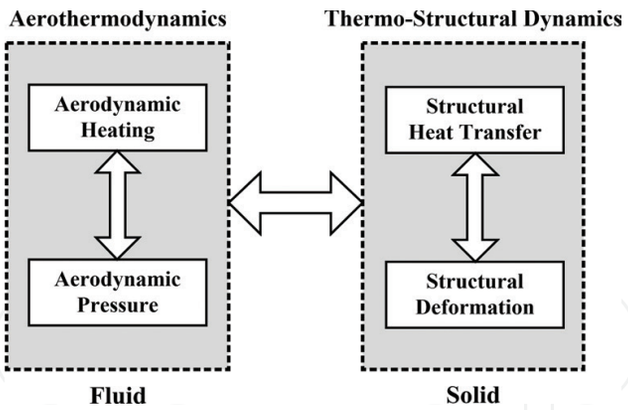

Figure 1. Coupling mechanism of multi-physics coupling problems for hypersonic vehicle.

with low rigidity is no longer negligible and induces thermal stress and thermal deformation while the fluid-thermal-structural coupling problem mainly characterized as the coupling between aerodynamic force/heat and heat transfer/thermal stress/deformation. In particular, the aerothermoelastic problem behaves more prominently for the large thin-walled flexible structures such as the wings and flight control rudders in which the fluid-thermal-structural coupling should consider the inertial effect and vibration of the structures.

The modeling of so-called multi-physics coupling problem mainly refers to constructing the mathematical-physical model to describe the coupling behavior of the multi-physical fields, namely, the partial differential equation systems (PDEs) to describe the multi-physics coupling problem and the corresponding initial/boundary conditions. And then, the analysis is to solve the partial differential equations by numerical simulation method to obtain the physical properties and behaviors. This modeling and analysis can generally be divided into two different types [4, 5], that is, the monolithic coupling approach and the partitioned coupling approach. According to the characteristics of multi-physics coupling problems, the global strategy for modeling and analysis is shown in **Figure 2**. The monolithic coupling approach is used respectively for the aerodynamic force/heat coupling within the fluid and the thermo-structural dynamic problems within the solid. In contrast, the partitioned coupling approach is applied for the fluid-thermal coupling and fluid-thermal-structural coupling problem through the fluid-solid coupling interface.

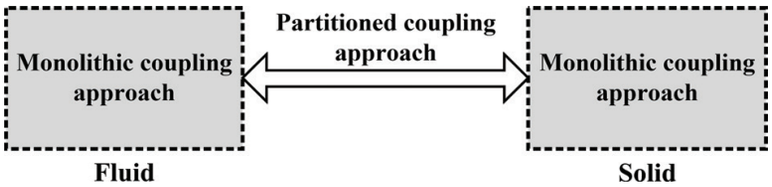

Figure 2. Global strategy for modeling and analysis approaches.

3. Modeling and analysis of flow-thermal coupling problem

The coupling mechanism of fluid-thermal coupling problem (or fluid-solid conjugate heat transfer problem) is a physical process of interaction between aeroheating within the fluid and the heat transfer within the solid through the fluid-solid coupling interface. When the vehicle flies at hypersonic speed within the atmosphere, it will face strong aeroheating due to strong shock compression and viscous friction. A part of aerodynamic heat flux radiates from the surface while the remaining transfers to the internal structure. The heat into the solid structure is closely related to the structure layout, material properties and various heat transfer boundaries of radiation and convection within the solid, thus forming specific heat distribution characteristics within the solid structure in the form of transient temperature field distribution. Meanwhile, the heat distribution characteristics within the solid structure, in turn, also restricts aeroheating further entering the internal solid structure through the variation of the wall temperature. It represents a strong two-way coupling relationship between the aeroheating environment of the external flowfield and the thermal response of internal solid structure. The aeroheating environment as thermal load is active excitation, which changes continuously along the flight trajectory so that the fluid-thermal coupling problem appears as a sustained non-transient physical coupling process.

This coupling process involves three different time scales, that is, the characteristic time of the dynamic flight trajectory, the characteristic time of the flow response and the characteristic time of the structural thermal response. Research and development of the coupling analysis strategy should take full account of the obvious difference in the above time scales. Two concepts are introduced herein: (1) static flight trajectory, which refers to the flight state (height, speed and angle of attack) remaining constant over time; and (2) dynamic flight trajectory, which refers to the flight state (height, speed and angle of attack) changing continuously over time.

3.1. Coupling analysis strategies based on static flight trajectory

3.1.1. Loosely-coupled analysis strategy

For hypersonic fluid-thermal coupling problems, in most cases, the characteristic time scale of structural thermal response is much longer than that of the flow response. Thus, the flow response can be assumed to be frozen over time compared with the structure thermal response. In other words, when the hypersonic flow is disturbed at certain time, a steady state can be reached instantaneously without relaxation process. Based on this physical assumption, the partitioned coupling method by calculating the steady flowfield and the transient structure heat transfer respectively is a good approximation, which can greatly improve the computational efficiency of coupling analysis.

A loosely-coupled analysis strategy for hypersonic fluid-thermal coupling problem based on static flight trajectory [6] is shown in **Figure 3**. Δt_F is the flowfield calculation time step, Δt_T is the structure heat transfer calculation time step. Δt_C is the coupling calculation time step, which can be set as several times of the structure heat transfer calculation time step, that is $\Delta t_C = n \cdot \Delta t_T$ ($n = 1, 2, 3, \cdots$). The interface coupling relations are achieved by the

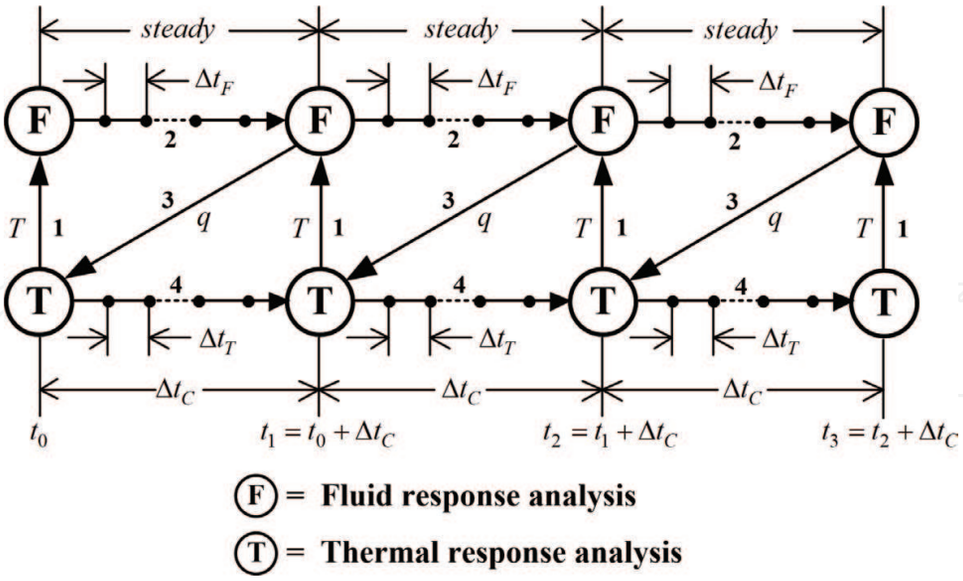

Figure 3. Loosely-coupled analysis strategy for fluid-thermal coupling problems.

Dirichlet-Neumann model [7], which has been validated for the fluid-thermal coupling problem solved by partitioned coupling method.

The loosely-coupled analysis strategy can be summarized as follows:

1. At the initial time t_0, an initial constant temperature or temperature field distribution is firstly given to the solid structure, and then the temperature distribution of the solid structure on the fluid-solid coupling interface is transferred to the fluid domain as a Dirichlet boundary condition of the flowfield calculation by the interface information transfer method.

2. By calculating the steady flowfield within the fluid domain based on the imposed boundary condition of temperature, wall heat flux distribution of the steady flowfield can finally be obtained.

3. The wall heat flux distribution of the steady flowfield is transferred to the solid domain as the Neumann boundary condition for the heat transfer calculation of the solid structure by the interface information transfer method.

4. Calculation of transient heat transfer from t_0 to $t_0 + \Delta t_C$ within the solid domain can be done based on the imposed heat flux boundary conditions to obtain the solid structure temperature field distribution at $t_0 + \Delta t_C$.

5. The solid structure wall temperature distribution at time $t_0 + \Delta t_C$ is transferred to the fluid domain as the Dirichlet boundary condition for the flowfield calculation by the interface information transfer method.

6. When the calculation in one coupling time step has been completed, the calculation will continue in the next time step until all the time steps are covered.

3.1.2. Tightly-coupled analysis strategy

In the loosely-coupled analysis strategy, only one information exchanges between the fluid and the solid in each coupling calculation time step, and thus the coupling calculation is relatively efficient. However, this loosely-coupled analysis strategy does not strictly satisfy time synchronization of interface coupling relations, which reduces the accuracy of coupling calculation. On the basis of the above loosely-coupled analysis strategy, the sub-iteration strategy can be introduced to each coupling calculation time step, which allows multiple information exchanges between the fluid and the solid. The time marching calculations of flowfield and structure heat transfer are repeated until the convergence, and then calculation will continue in the next coupling time step, which forms a tightly-coupled analysis strategy. Obviously, the tightly-coupled analysis strategy improves the accuracy of the coupling calculation, but it requires additional sub-iteration calculation which decreases the calculation efficiency.

Figure 4 shows the tightly-coupled analysis strategy of hypersonic fluid-thermal coupling problem based on static flight trajectory. The tightly-coupled strategy adds a step to repeat step (2) to step (5) until the convergence is satisfied.

3.2. Coupling analysis strategy based on dynamic flight trajectory

If the flight trajectory of the vehicle varies continuously over time, the influence of the flight trajectory variation should be considered in the coupling analysis. As the flight trajectory variation is the macroscopic motion of the vehicle as a rigid body and the time span of the continuous flight is large, the flight trajectory variation over time is relatively slow. Therefore, the time scale of affecting aeroheating characteristics is much larger than the coupling time scale between the flowfield and the heat transfer. A coupling analysis strategy for hypersonic fluid-thermal coupling problem based on dynamic flight trajectory is then shown in **Figure 5**.

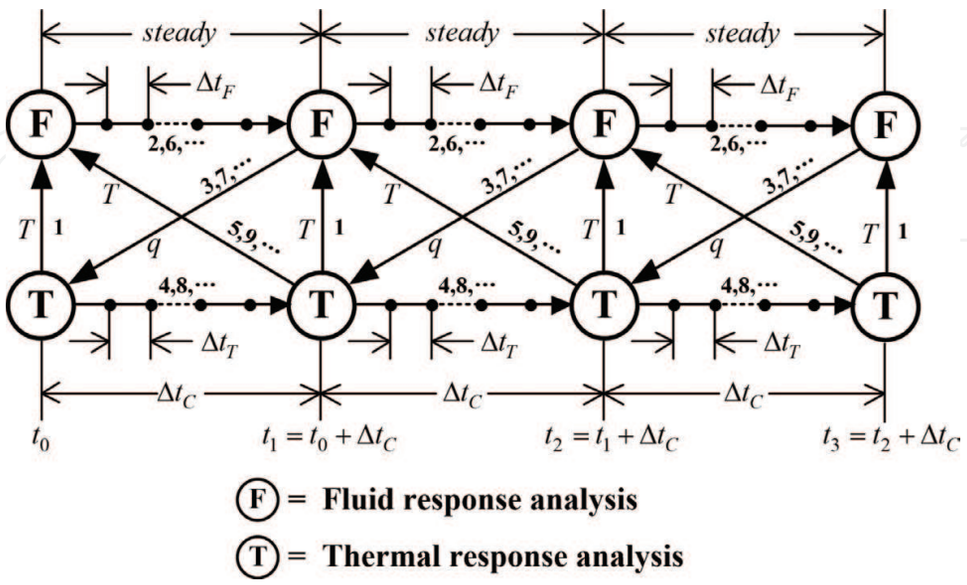

Figure 4. Tightly-coupled analysis strategy for fluid-thermal coupling problems.

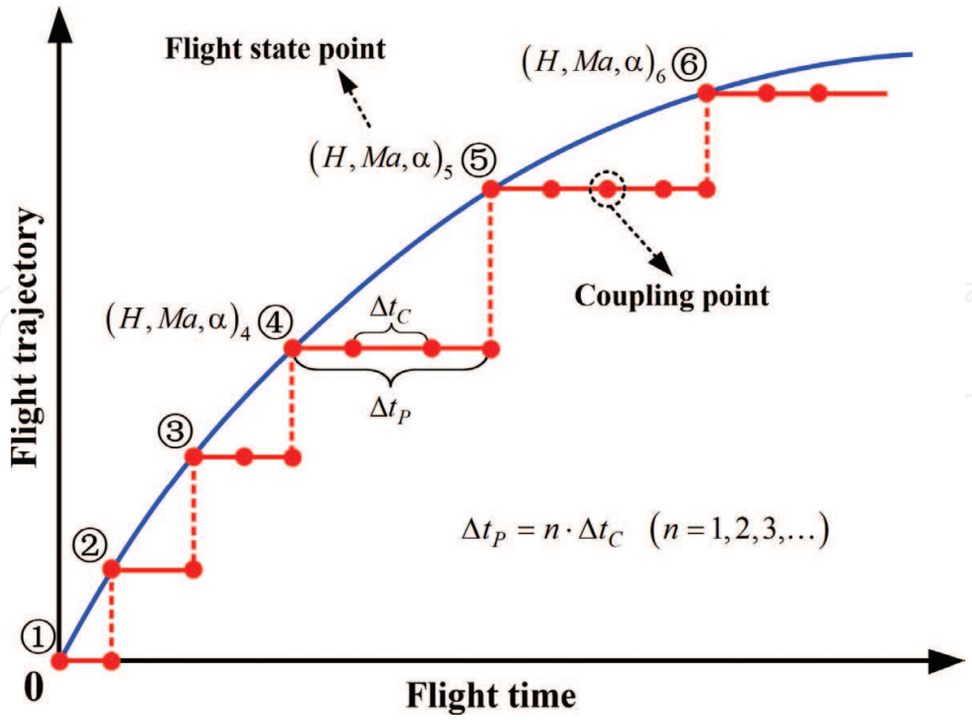

Figure 5. Coupling analysis strategy based on dynamic trajectory.

It is to discretize the fluid-thermal coupling problem of the sustained dynamic flight trajectory into a set of fluid-thermal coupling problems of quasi-static flight trajectories in chronological order. The details are listed below:

1. The flight trajectory of the vehicle is regarded as a continuous flight state function in the time domain. The appropriate time step Δt_P is selected to discretize the flight trajectory into a series of discrete flight state point $(H, Ma, \alpha)_i$ and the duration of each discrete flight state point is in which the internal flight conditions remain constant, set as the average of flight conditions at the starting point and at the ending point of the discrete flight state.
2. During Δt_P of each discrete flight state, the problem is regarded as the fluid-thermal coupling problem based on the static flight trajectory. The appropriate coupling calculation time step $\Delta t_C = \Delta t_P/n$ $(n = 1, 2, 3, \cdots)$ is selected.
3. After the coupling calculation of one discrete flight state point, the coupling calculation of the next discrete flight state point in time order will be done until the end of the entire flight.

3.3. Fluid-thermal coupling analysis of hypersonic vehicle

The geometry of hypersonic vehicle model is shown in **Figure 6**. The head part is made of C/C composites, and the rest of fuselage is made of TB6 titanium alloy. The integrated analysis program platform Hypersonic Computational Coupling Dynamics (HyCCD) for

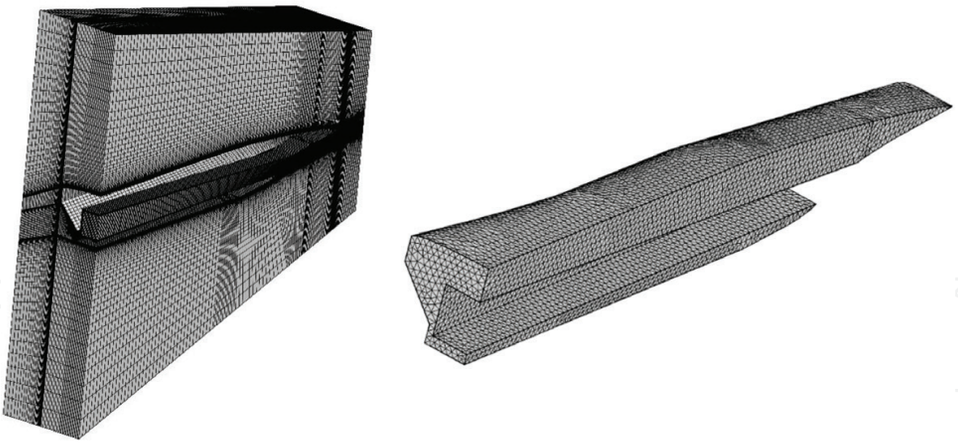

Figure 6. The geometric shape and CFD/FEM computational grid.

hypersonic fluid-thermal coupling problem is realized by integrating hypersonic aerothermodynamic numerical simulation program Hypersonic Computational Fluid Dynamics (HyCFD) and the finite element heat transfer analysis software (ANSYS Mechanical APDL). The external CFD computational grid is multi-block structured grid, the internal FEM grid is unstructured grid.

The actual flight of hypersonic vehicles usually includes climbing, cruise and descending. A simple flight trajectory is assumed here, as is shown in **Figure 7**. The flight time along the trajectory is 210 s, 0–50 s for climbing, 50–150 s for cruise and 150–210 s for descending. The discrete time step of the selected flight trajectory is $\Delta t_P = 5$ s, and the flight trajectory is divided into 42 discrete flight states. The loosely-coupled analysis strategy is used for the fluid-thermal coupling analysis, and the fluid-solid coupling time step is $\Delta t_C = 5$ s. The chemical non-equilibrium gas model is used for flowfield calculation. Non-catalytic wall is selected as the boundary condition. The initial temperature is 300 K, the inner wall temperature keeps at 300 K during the flight, and the outer wall emissivity is $\varepsilon = 0.8$.

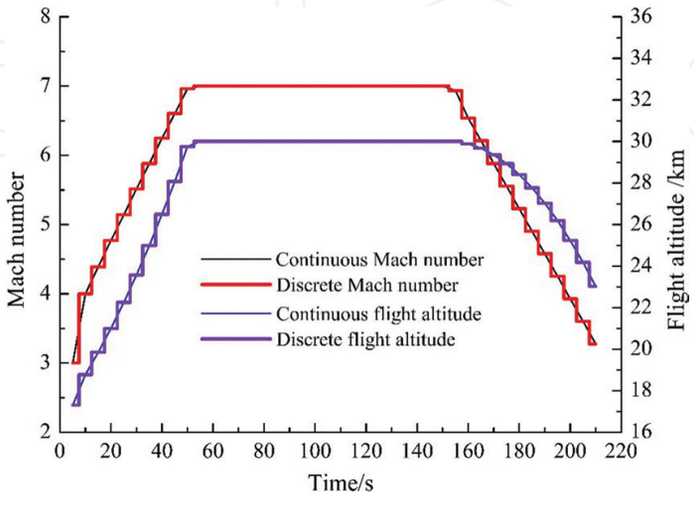

Figure 7. The dynamic flight trajectory and its discretization.

Figure 8 shows the wall temperature at the leading edge stagnation point of the symmetric plane along the dynamic trajectory. The wall temperature evolution without considering the wall radiation effect is also given in the figure for comparison. It can be seen that: (1) from the starting point $t = 0$ s to the cruise state $t = 50$ s, the wall temperature of the structure gradually increases while the aeroheating capacity of the external flowfield rises gradually due to the increasing flight speed, and thus more and more aerodynamic heat is transferred into the internal solid structure through the interface. The solid structure keeps storing heat; (2) during the cruise $t = 50$–150 s, although the flight conditions no longer change and the aeroheating capacity of the external flowfield remains constant, aerodynamic heat is still continuously transferred into the internal structure due to the fluid-solid heat transfer coupling effect. The solid structure still keeps storing heat. Meanwhile, as the wall temperature continues to rise, less and less aerodynamic heat will be transferred into the internal structure. If the cruise flight time is long enough, the fluid-solid heat transfer coupling will eventually reach equilibrium; and (3) in descending $t = 150$–210 s, the flight speed begins to decrease, the aeroheating capacity begins to weaken while the wall temperature has been extremely high, reaching the temperature peak along the entire trajectory. The solid structure begins to release heat, and thus the wall temperature decreases gradually.

Figure 9 show the temperature distribution of I-I cross-section (see **Figure 8**) within the solid structure, intuitively presenting how the temperature distribution within the structure changes with the dynamic trajectory. It should also be noted that the heat distribution and transmission within the structure will change with the trajectory of the vehicle, thus exhibiting dynamic multi-field coupling spatial-temporal characteristics. It is an effective

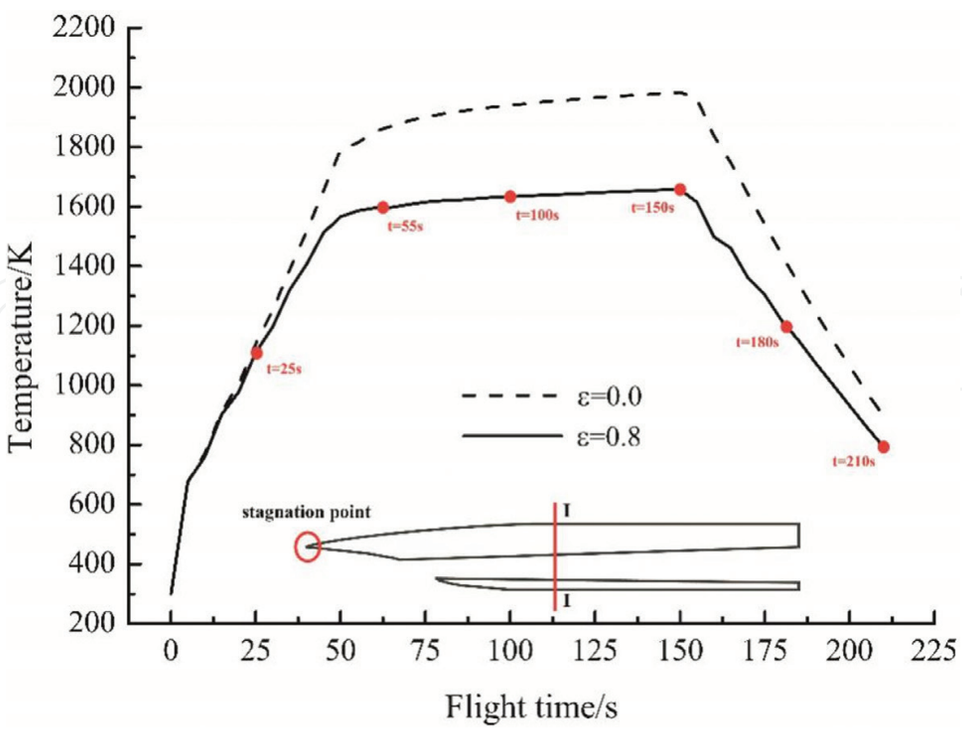

Figure 8. The wall temperature at stagnation point of the symmetric plane leading edge.

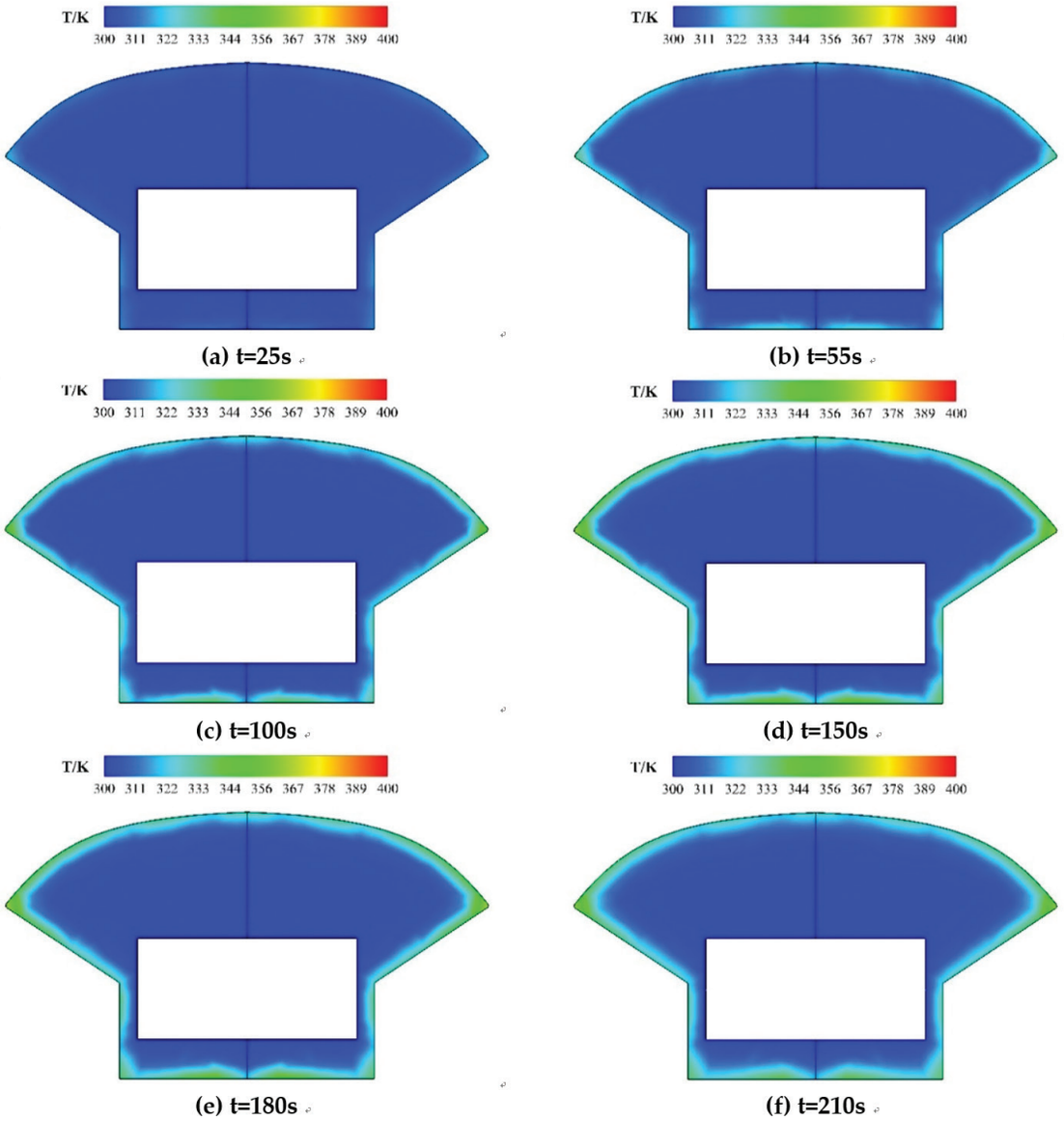

Figure 9. The temperature distribution of the I-I section plane within the solid structure. (a) $t = 25$ s, (b) $t = 55$ s, (c) $t = 100$ s, (d) $t = 150$ s, (e) $t = 180$ s, and (f) $t = 210$ s.

to optimize the integrated design of thermal protection and to study new concepts and methods of thermal protection by accurately predicting and analyzing the temporal and spatial distribution characteristics and the transmission of heat within the vehicle solid structure for guidance.

The preliminary analysis and research on coupling characteristic and influencing factors of the hypersonic fluid-thermal coupling problem reveal the spatial-temporal distribution characteristics of the fluid-solid heat transfer coupling and the influence of wall radiation effect on the sustained flight conditions. There is a close coupling between the aeroheating of the flowfield and the heat transfer of the structure. The heat distribution and transfer within the structure change with the dynamic trajectory, which displays the spatial and temporal characteristics of multi-physics coupling. The integrated analysis method and the program platform

HyCCD can effectively predict and analyze the thermal response characteristics and principals of the solid rigid structures inside the hypersonic vehicle under sustained flight conditions. The accurate prediction and analysis will be an effective way to optimize thermal protection design and to study new concepts and methods of thermal protection system of hypersonic vehicles.

4. Modeling and analysis of fluid-thermal-structural coupling problem

During the sustained flight of an actual hypersonic vehicle within the atmosphere, the strong two-way coupling of aerothermal environment with thermal response within solid structures causes the heat distribution in the form of transient temperature field. It not only has dynamic effects on the properties of solid structures also causes thermal stress due to the temperature gradient. Meanwhile, the resultant thermal strain from the thermal stress influences the heat distribution through the deformation of the solid structures. The large structural deformation even affects the aerodynamic forces/heat in the external flowfield. On the other hand, the aerodynamic forces lead to the structural stress and structural within solid structures, which can also affect aerodynamic forces/heat in the external flowfield in the form of structural deformation.

The fluid-thermal-structural coupling model is shown in **Figure 10**. The volumetric coupling of the aerodynamic forces and aerodynamic heat of the flowfield within the fluid is described by unified fluid governing equations, which is solved by computational fluid dynamics (CFD) to obtain the parameters of aerodynamic forces/heat. The thermal load (wall heat flux q) and force load (wall pressure p) are imposed on the solid through the fluid-solid coupling interface. Within the solid, the thermal response is described by governing equations of heat conduction, while the stress/strain are described by governing equations of thermoelastics.

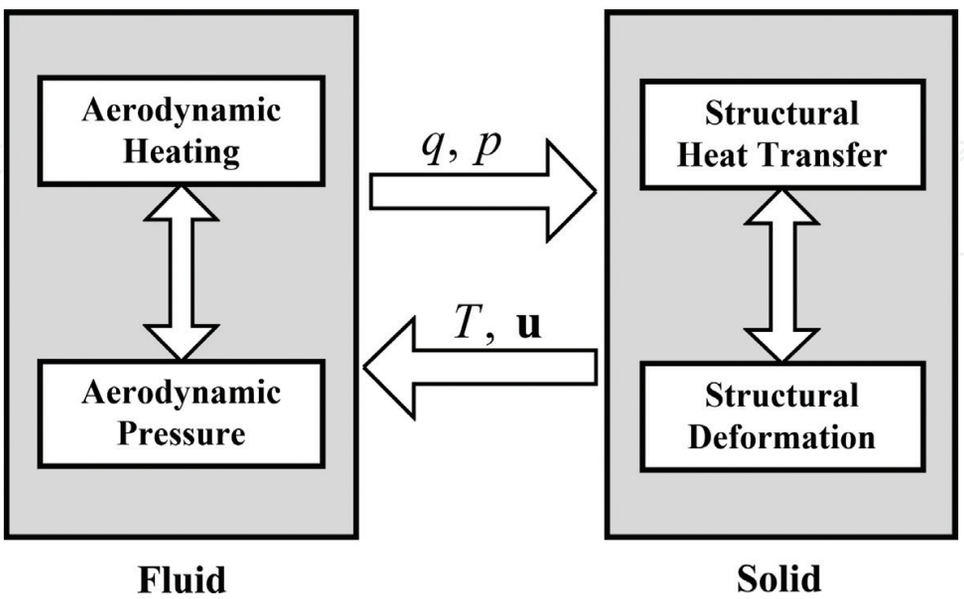

Figure 10. Fluid-thermal-structural coupling model.

Considering the effects of the temperature-deformation coupling, the parameters within the solid can be obtained by solving the governing equations of heat conduction and thermoelastics with HyCCD platform. The temperature condition (the wall temperature T) and structural deformation condition (the surface displacement $\mathbf{u}$) are provided for the fluid through the fluid-solid coupling interface.

4.1. Coupling analysis strategies based on static flight trajectory

4.1.1. Loosely-coupled analysis strategy

The loosely-coupled analysis strategy for the fluid-thermal-structural coupling problem on the basis of the static trajectory is shown in **Figure 11**. Δt_F is the time step in flow-field calculation, Δt_{TS} is the time step in thermal-structure volumetric coupling calculation of solid; Δt_C is the time step in fluid-solid coupling surficial calculation and can be set as several times the time step in thermal-structure volumetric coupling calculation of solid, that is $\Delta t_C = n \cdot \Delta t_{TS}$ ($n = 1, 2, 3, \cdots$).

The loosely-coupled analysis strategy can be summarized as:

1. At the initial time t_0, an initial constant temperature or temperature field distribution as well as the initial load and displacement constraints is given to the solid structure first. Then the wall temperature and displacement of the solid structure are transferred to the fluid domain by the information transfer method of the interface. The wall temperature is used for the boundary condition in the flowfield calculation, while the displacement is used to update the flow-field grid;

2. By calculating the steady flowfield in the fluid domain based on the imposed boundary condition of temperature and the updated flow-field grid, the wall heat flux and the wall pressure can finally be obtained;

3. The wall heat flux and the wall pressure of the steady flowfield are transferred to the solid domain as the heat load and force load respectively for the thermo-structural dynamic calculation of solid by the information transfer method of the interface;

4. Transient thermo-structural dynamic calculation can be done in the solid domain based on the imposed heat and force load to obtain the response parameters of the solid structural heat/force coupling as the time advances from t_0 to $t_0 + \Delta t_C$ and finally reaches $t_0 + \Delta t_C$;

5. The wall temperature and displacement of the solid structure at $t_0 + \Delta t_C$ are transferred to the fluid domain by the information transfer method of the interface. The wall temperature is used for the boundary condition for flowfield calculation, while the displacement is used to update the flow-field grid;

6. When the calculation in one coupling time step has been completed, the calculation will continue in the next time step until all the time steps are covered.

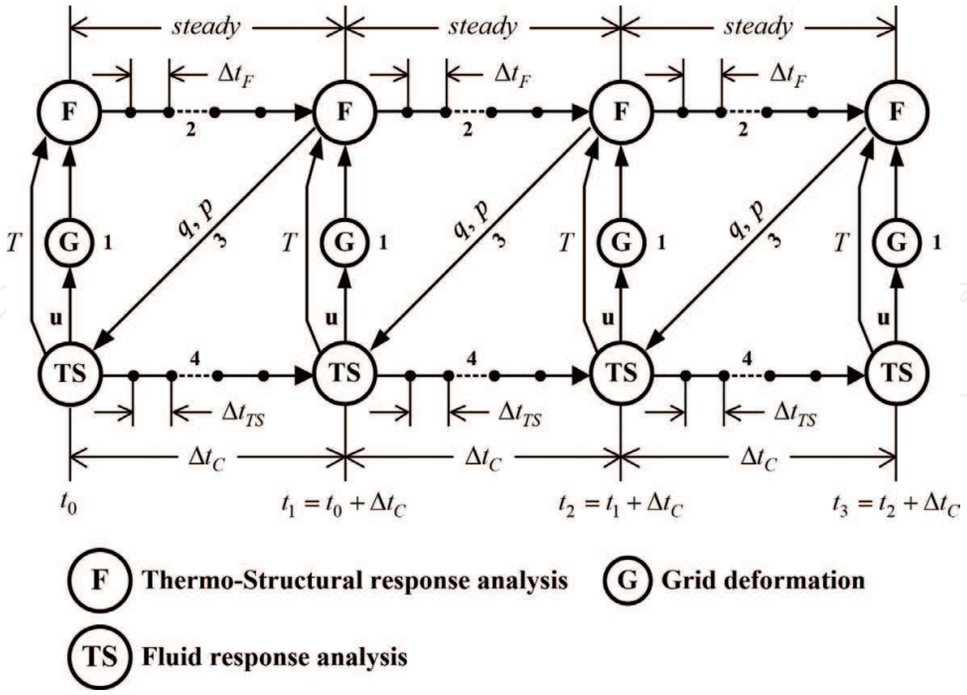

Figure 11. Loosely-coupled analysis strategy for fluid-thermal-structural coupling problem.

4.1.2. Tightly-coupled analysis strategy

By introducing sub-iteration into each computational time step of coupling in the loosely-coupled analysis strategy, the tightly-coupled analysis strategy for fluid-thermal-structural coupling problems based on the static trajectory is shown in **Figure 12**.

4.2. Coupling analysis strategies based on dynamic trajectory

The coupling analysis strategy is to discretize the sustained dynamic trajectory into a set of a finite number of quasi-static trajectories in chronological order.

4.3. Fluid-thermal-structural coupling analysis of inlet cowl leading edge

As for the fuselage-engine-integrated design, the waverider forebody is utilized for pre-compression in order to produce lift and at the same time obtain the flow rate required by the engine inlet. In this case, both the waverider forebody and the cowl leading edge are on windward side where the most severe aeroheating takes place. As shown in **Figure 13**, the forebody precompression oblique shock and the cowl leading edge shock may intersect with each other, which leads to shock interaction and thus aggravates aeroheating near the cowl leading edge, even more severe than that at the nose leading edge. Case 1 is defined as over-ideal state, in which the incident shock enters the cowl and the cowl leading edge is under the far-field freestream condition. Case 2 is defined as ideal state, in which the incident shock arrives exactly at the inlet cowl and interacts with the shock at the cowl leading edge; Case 3 is defined

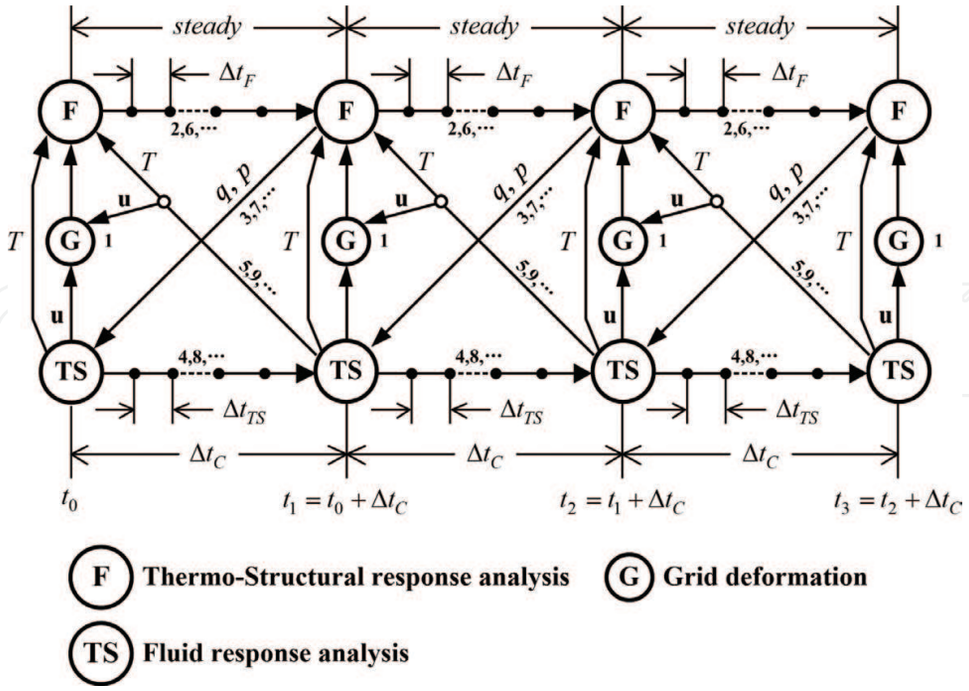

Figure 12. Tightly-coupled analysis strategy for fluid-thermal-structural coupling problem.

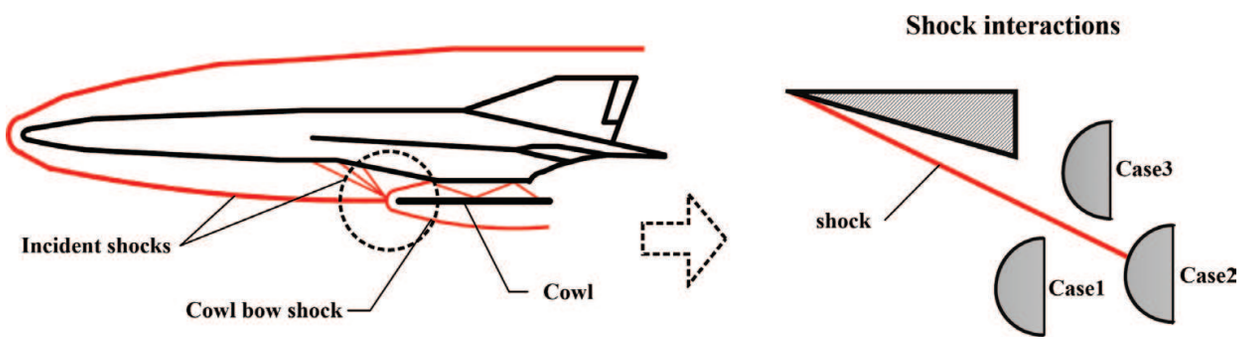

Figure 13. The shock interaction phenomena near the inlet cowl leading edge.

as under-ideal state, in which the incident shock outside has not reached the cowl and the cowl leading edge is under the downstream shock freestream condition.

The cylindrical leading edge model is used as the inlet cowl leading edge model, which utilize titanium alloy (Ti-6Al-2Sn-4Zr-2Mo) as the material. Sustained coupling calculation time of 11 seconds is selected for the fluid-thermal-structural coupling calculation and analysis of the engine cowl leading edge model; the loosely-coupled analysis strategy is employed for calculation and its fluid-solid surficial coupling calculation time step adopts the adaptive strategy. High temperature chemical non-equilibrium gas model is adopted for the calculation of the external fluid domain, non-catalytic wall is selected as the wall catalytic condition. The initial temperature for calculation of thermal-structural coupling within the solid domain is 300 K with zero initial stress and the reference temperature of thermal stress is 300 K. The aerodynamic

force/thermal load of the external flowfield are taken into consideration and the wall radiation effect is also considered with the surface emissivity $\varepsilon = 1.0$ in the coupling calculation and analysis. A pressure load $p_\infty = 1197$ Pa is imposed on the inner wall, the fixed support is selected for both ends of the model.

It can be intuitively seen from **Figure 14** that under the effect of the striking of the extremely densified heat flux due to shock interaction, the heat rapidly accumulates within the structure nearby the struck point, causing a leading increase in the temperature of the point. As the heat accumulates at the point over time, the structure temperature is also increasing and at the same time the heat is gradually transferred to internal area in depth. Hence, the temperature distribution is also gradually expanding from the struck point to internal structure area in depth. Simultaneously, the amplitude of overall temperature distribution within the structure declines much if wall radiation effect is taken into account because it effectively limits the heat entering the internal structure. **Figure 15** shows that the earliest stress concentration occurs within the structure near the struck point on the wall. The stress distribution is also gradually expanding to the internal structure area in depth over time. Simultaneously it is also shown that the amplitude of overall stress distribution inside the structure declines if wall radiation effect is taken into account.

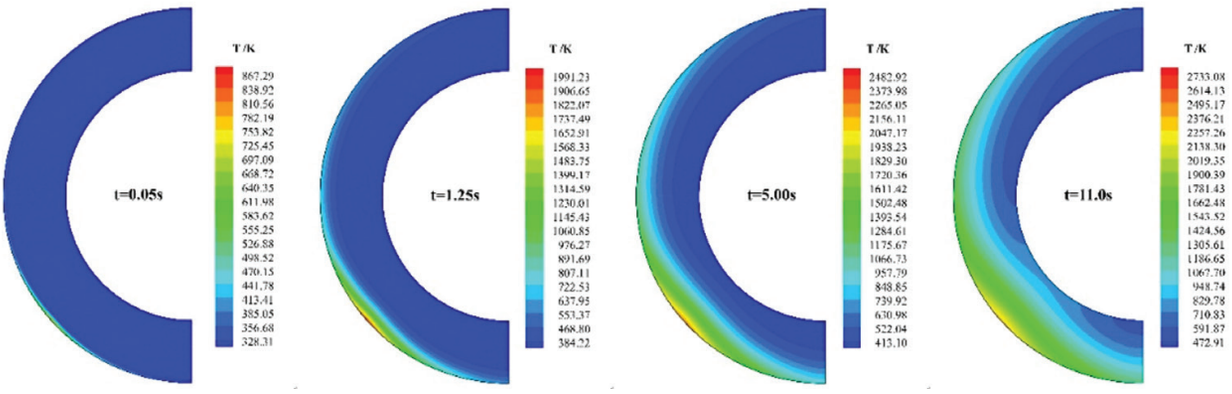

Figure 14. The structure temperature within the inlet cowl leading edge model.

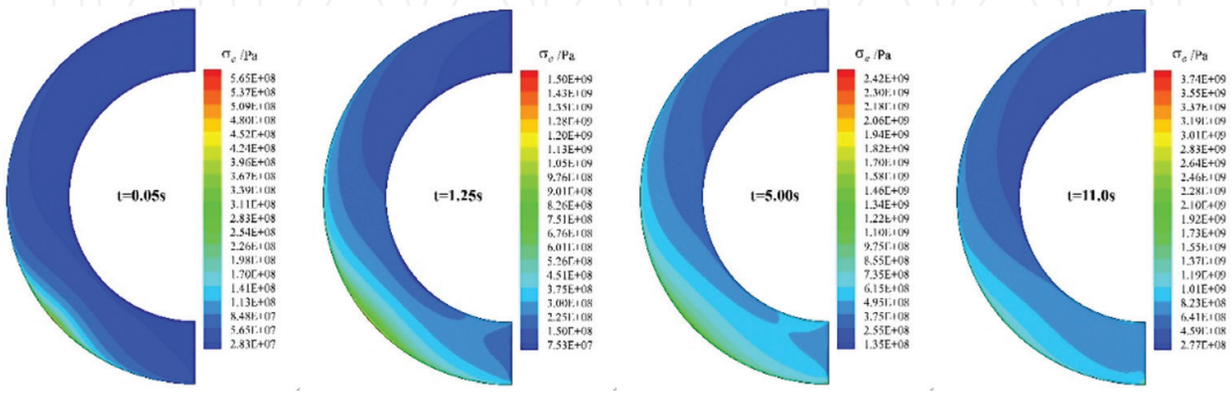

Figure 15. The structural stress within the inlet cowl leading edge model.

In general, the aerodynamic force and thermal load have a great impact on the inlet cowl leading edge, which suffices to cause thermal and dynamic damage to thermal protection structures despite the short imposing time in actual flight, presenting severe challenge for material selection and structure design of thermal protection. As for the air-breathing hypersonic vehicles, the impact of shock interaction is common in the surrounding flowfield. Therefore, thermal protection design of local leading edges (structures such as the tail and rudders) on the windward side wrapped by the nose shocks should be done carefully besides the nose and the engine cowl leading edge.

5. Research on structural thermal modals

Aeroelastic problems have been the key in vehicle design, which has gradually become a notable obstacle to better vehicle performance with the development of vehicle. Under the effect of aeroheating, the temperature rise of a structure leads to variation in physical parameters of its material. Also, non-uniform temperature field within the structure causes prominent temperature gradients, which produces subsidiary thermal deformation and thermal stress, greatly alters the structural rigidity and thus changes the natural vibration performance of the structure. The variation of natural vibration performance due to thermal load significantly affects the trim, flutter and control characteristics of the vehicle and these effects tend to be unfavorable.

5.1. Thermal modal analysis strategy based on multi-physics coupling

The thermal modal analysis strategy based on multi-physics coupling integration method is shown in **Figure 16**. It can be summarized as: (1) employing the multi-physics coupling integration method HyCCD based on CFD, CTD and CSD, transient temperature field and stress field within the solid structure along its static or dynamic trajectory are obtained by doing hypersonic fluid-thermal-structural coupling analysis according to the coupling analysis strategy described above and (2) thermal rigidity matrix can be constructed by taking parameters of thermodynamic state within the solid structure of each time point for coupling calculation. Then, the thermal modal characteristics at each time point for coupling calculation of the solid structure are obtained by solving the generalized eigenvalue problem by means of conventional mode analysis method.

5.2. Thermal modal characteristic analysis of a typical hypersonic wing

The thermal modal characteristic analysis under sustained flight of a typical three-dimensional low-aspect-ratio hypersonic wing model is presented in **Figure 17**. It is a symmetrical double edge with the leading edge blunted and small thickness of the trailing edge retained to avoid sharp edges. The material has mass density of 4539 kg/m^3 and Poisson number of 0.32 with all the other physical properties varying with temperature. The temperature at initial time is 300 K with zero initial stress and the reference temperature of thermal stress is 300 K. Fixed support is adopted at the wing root.

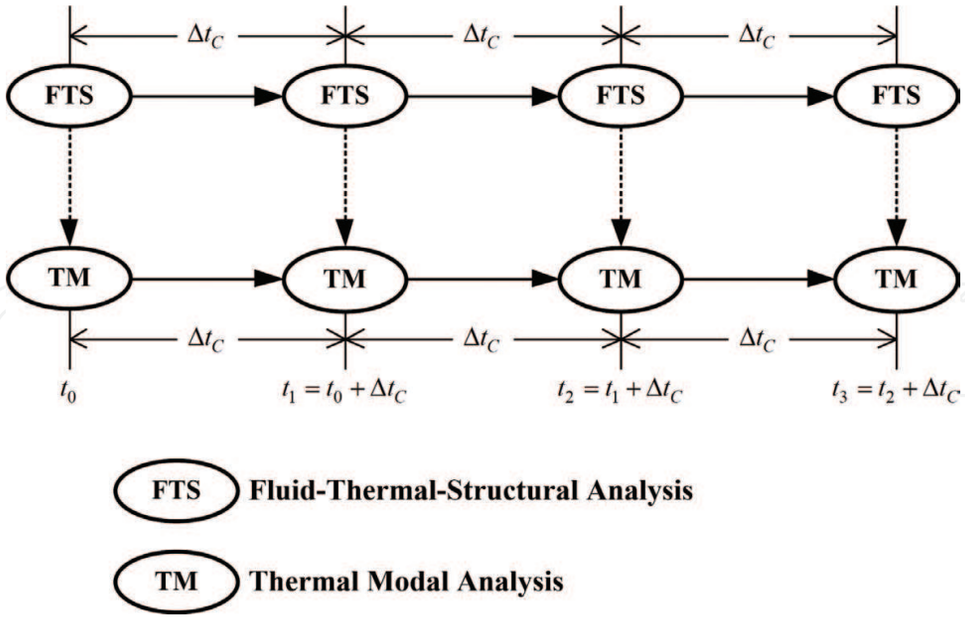

Figure 16. The thermal modal analysis strategy based on multi-physics coupling integration.

5.2.1. Thermal modal analysis along the static trajectory

Set the total cruise flight time to 100 s and the flight environment to be 30 km within standard atmosphere. Calorically perfect gas model is adopted. The thermal modal is analyzed in both the case with zero wing AOA and that with non-zero wing AOA.

Figure 18 presents the first six modal shapes of the hypersonic wing with zero AOA at time t = 100 s. It can be seen that the modal shape of each order at time t = 100 s has local changes to varying degrees compared to the modal shape at initial time. The first four modes generally retain the original modal shapes, while the fifth and the sixth change a lot in their modal shapes with the trend towards bending-torsion coupling that usually leads to vibration of the wing. Therefore, sustained aeroheating has effect on modal shapes of higher order more easily for wings that are fixed-supported at root. As AOA is gradually increased, the aerodynamic forces and thermal load imposed on lower wing surface becomes larger than those imposed on the upper wing surface, which changes the thermodynamic state within the wing and thus influences the natural vibration characteristics of the wing. **Figure 19** presents the first six modal shapes of the hypersonic wing at time t = 100 s under the AOA of 10 deg. It can be seen from the figure that compared with the modal shapes in the zero AOA case, modal shapes of all orders have little change, which indicates that modal shape is not very sensitive to variation of AOA. It is necessary to point out that the analysis above only involves flight time of 100 s. Actually, time of sustained flight of vehicle is an influencing parameter of great importance. The fluid-thermal-structural coupling will finally reach thermodynamic equilibrium. In the process, the modal frequency and modal shape of the wing will continue to change and at the same time the effect of AOA on modal frequency and modal shape will become more prominent.

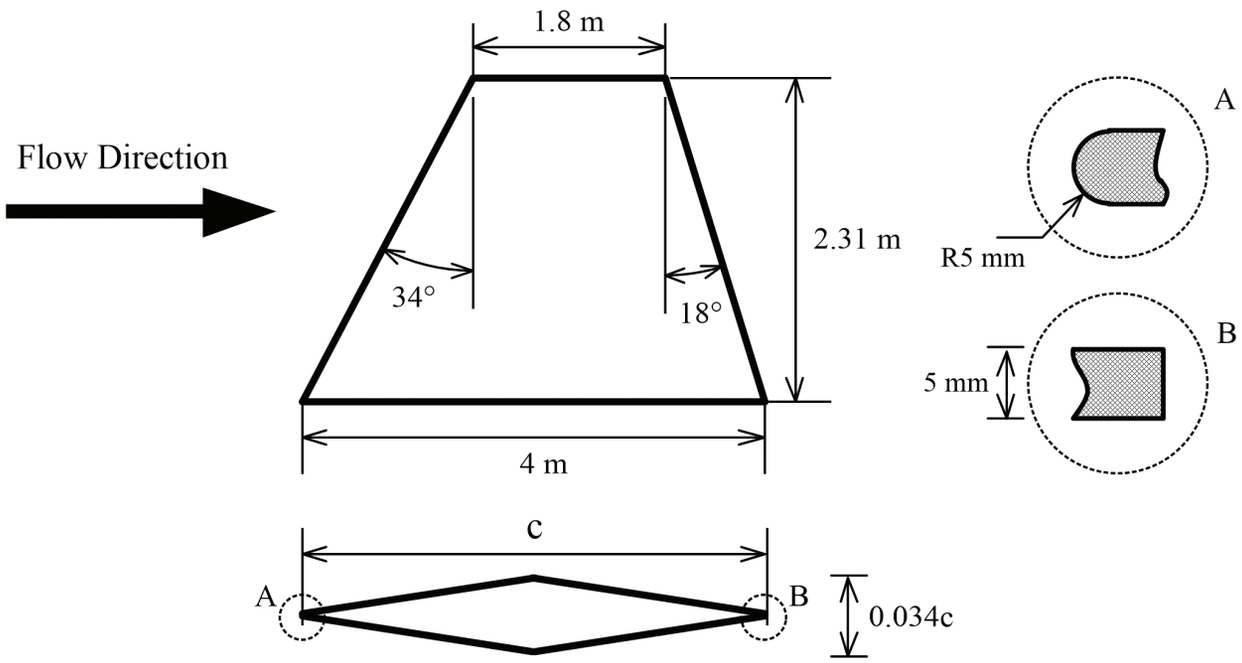

Figure 17. The three-dimensional low-aspect-ratio hypersonic wing.

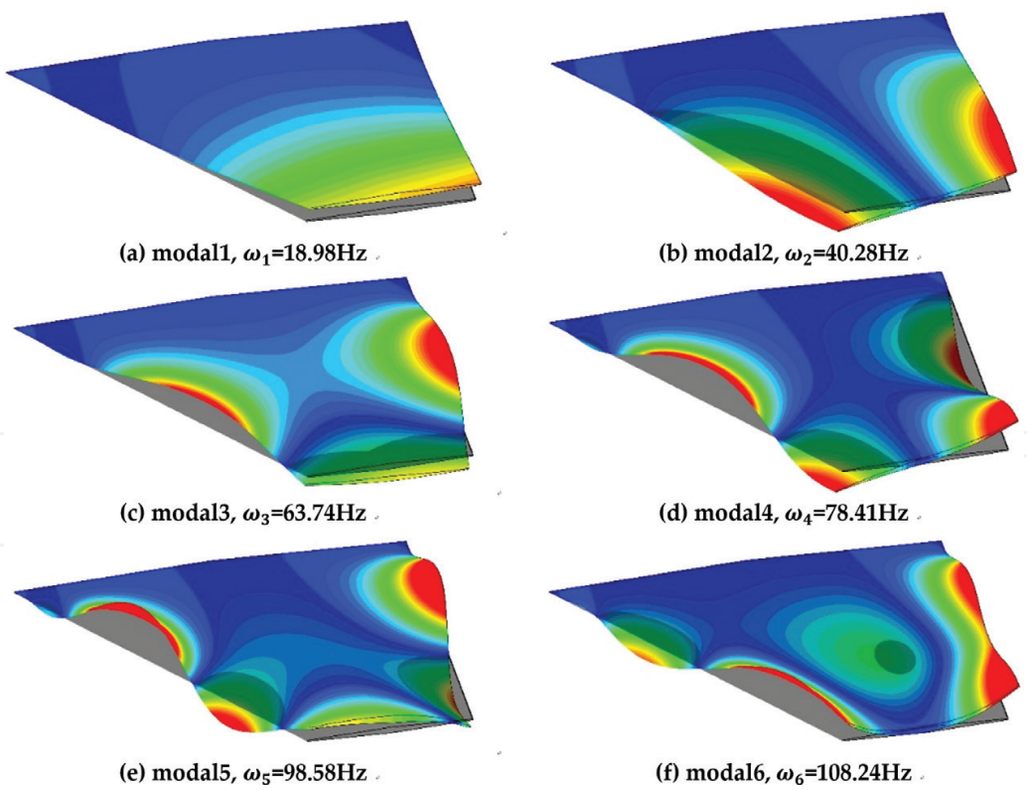

Figure 18. The first six modals of the hypersonic wing with zero AOA at time t = 100 s. (a) modal 1, ω_1 = 18.98 Hz, (b) modal 2, ω_2 = 40.28 Hz, (c) modal 3, ω_3 = 63.74 Hz, (d) modal 4, ω_4 = 78.41 Hz, (e) modal 5, ω_5 = 98.58 Hz, and (f) modal 6, ω_6 = 108.24 Hz.

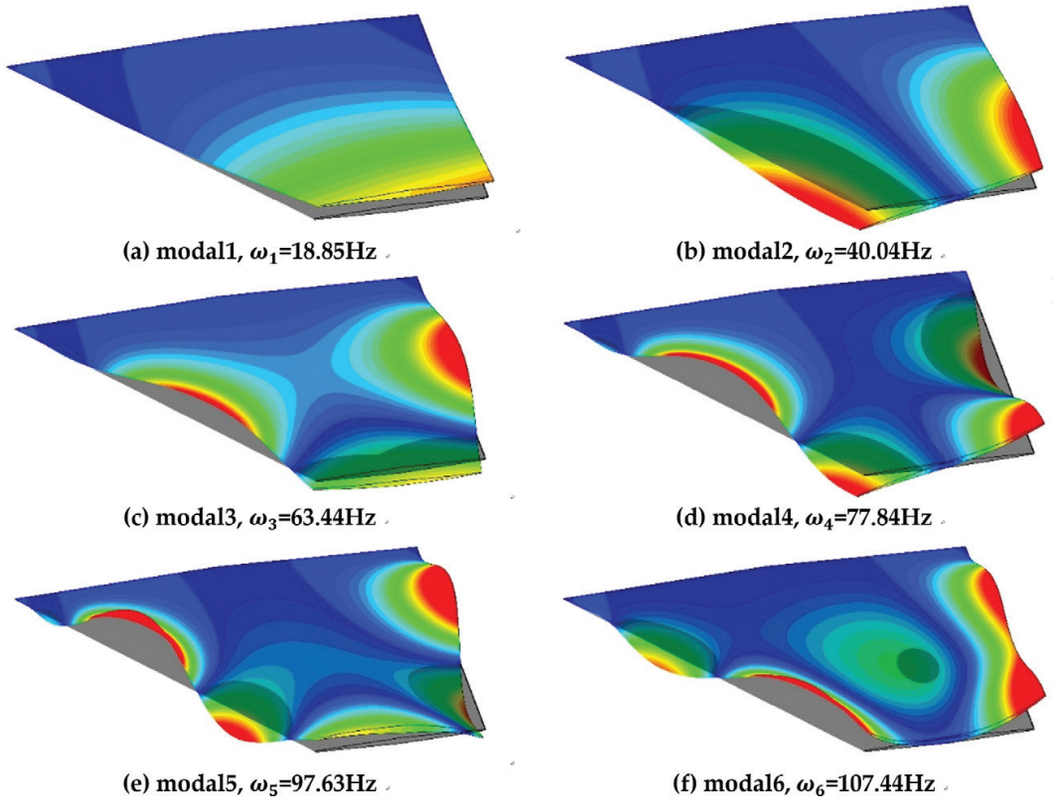

Figure 19. The first six modals of the hypersonic wing at time $t = 100$ s under the AOA of 10 deg. (a) modal 1, $\omega_1 = 18.85$ Hz, (b) modal 2, $\omega_2 = 40.04$ Hz, (c) modal 3, $\omega_3 = 63.44$ Hz, (d) modal 4, $\omega_4 = 77.84$ Hz, (e) modal 5, $\omega_5 = 97.63$ Hz, and (f) modal 6, $\omega_6 = 107.44$ Hz.

5.2.2. Thermal modal analysis along the dynamic trajectory

A simple flight trajectory is assumed referring to **Figure 5** to further analyze variation of thermal modal characteristics in complicated flight. **Figure 20** presents that dynamic variation of flight trajectory leads to the variation of the thermodynamic state within the wing as well as its modal frequency. From the initial time to the end of cruise, the modal frequency of each order gradually declines; the decline tends to be gentle and then shows a recovery as the vehicle descends. It turns out that the first modals have little change along the flight trajectory, generally retaining the original modal shapes while major variation takes place in the fifth/sixth-order mode, especially the sixth-order mode in which case bending-torsion coupling tends to occur. If the climbing, cruise and descending phase, especially cruise, last long enough, the modal frequency and modal shape of each order can have more significant variation with dynamic variation of the flight trajectory.

The modal frequencies of each order show a downward trend over time and the decreasing rates vary from mode to mode. Modes of all orders get nearer or farther one another to varying degrees over time, which might impose severe impacts on the natural vibration characteristics of the structure. The results indicate that sustained aeroheating has effect more easily on modal shapes of higher order. Therefore, for hypersonic vehicles with large thin-walled

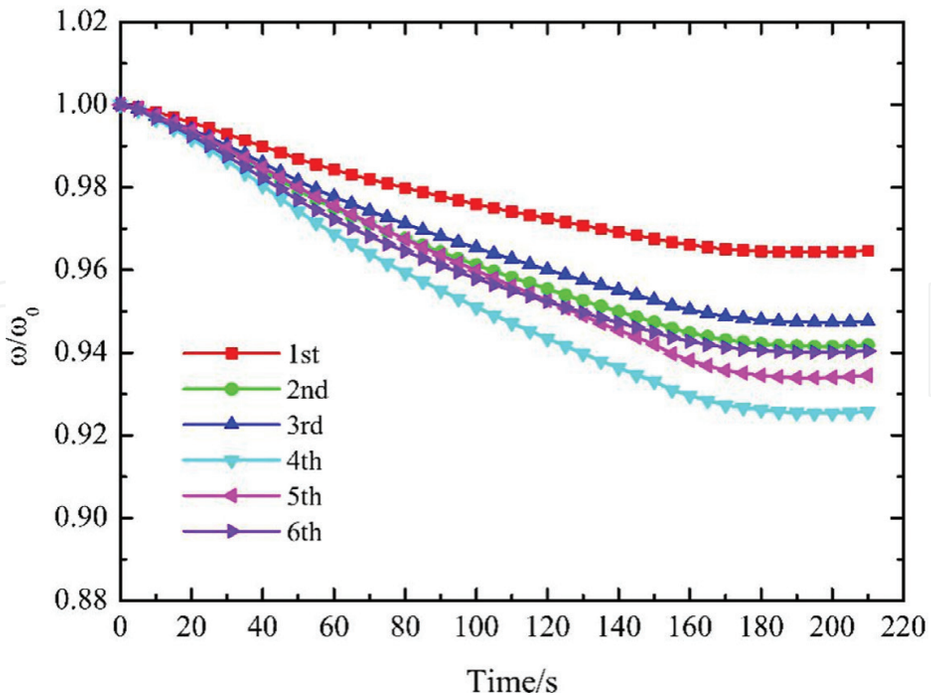

Figure 20. The first six modal frequencies along the flight trajectory.

control surfaces, sustained aeroheating has great effect on the natural vibration characteristics. In general, the strategies and methods for multi-physics field coupling integration analysis developed can effectively predict and analyze the variation of natural vibration characteristics (natural frequency and natural vibration shape), which lays a good foundation for further research on aerothermoelastic problems.

6. Conclusions

By modeling and analysis of hypersonic multi-physics coupling problem, the mathematical and physical description of the various coupling model is established, and then the corresponding coupling analysis strategy is proposed. In the framework of coupling analysis strategy, an integrated analysis program platform HyCCD by integrating hypersonic aerodynamic numerical simulation program and general finite element thermal analysis software is developed to study the relevant problem of hypersonic multi-physics coupling problem. Through these representative studies, the key novel contributions are achieved as follows: (1) studying the coupling mechanism of the multi-physics coupling problems among hypersonic flow, thermal and structure, and hierarchically creating the multi-physics coupling mathematical models and (2) proposing the effective coupling analysis strategies, and synthetically developing a set of high-effective multi-physics coupling integrated analysis method that has engineering applicability. These achievements can provide the theoretical and technical support for the studies on comprehensive performance evaluation and optimization of thermal protection system and the study on aerothermoelastic problem.

Acknowledgements

This study was supported by the National Natural Science Foundation of China (Nos. 11672183, 91641129 and 91441205).

Author details

Fang Chen[1]*, Shengtao Zhang[1,2] and Hong Liu[1]

*Address all correspondence to: fangchen@sjtu.edu.cn

1 Shanghai Jiao Tong University, Shanghai, China

2 AECC Commercial Vehicle Engine Co., Ltd, Shanghai, China

References

[1] Bertin JJ, Cummings RM. Fifty years of hypersonics: Where we've been, where we're going. Progressing in Aerospace Sciences. 2003;**39**(6):511-536

[2] Moses PL, Rausch VL, Nguyen LT, et al. NASA hypersonic flight demonstrators—Overview, status, and future plans. Acta Astronautica. 2004;**55**(3):619-630

[3] McNamara JJ, Friedmann PP. Aeroelastic and aerothermoelastic analysis in hypersonic flow: Past, present, and future. AIAA Journal. 2011;**49**(6):1089-1121

[4] Errera M, Dugeai A, Girodroux-Lavigne P, et al. Multi-physics coupling approaches for aerospace numerical simulations. Aerospace Lab. 2011;(2):1-16

[5] Felippa CA, Park KC, Farhat C. Partitioned analysis of coupled mechanical systems. Computer Methods in Applied Mechanics and Engineering. 2001;**190**(24):3247-3270

[6] Zhang ST, Chen F, Liu H. Time-adaptive, loosely coupled strategy for conjugate heat transfer problems in hypersonic flows. Journal of Thermophysics and Heat Transfer. 2014;**28**(4):635-646

[7] Giles MB. Stability analysis of numerical interface conditions in fluid-structure thermal analysis. International Journal of Numerical Methods in Fluids. 1997;**25**(4):421-436

IntechOpen