We are IntechOpen, the world's leading publisher of Open Access books Built by scientists, for scientists

6,900
Open access books available

186,000
International authors and editors

200M
Downloads

Our authors are among the

154
Countries delivered to

TOP 1%
most cited scientists

12.2%
Contributors from top 500 universities

WEB OF SCIENCE™

Selection of our books indexed in the Book Citation Index in Web of Science™ Core Collection (BKCI)

Interested in publishing with us?
Contact book.department@intechopen.com

Numbers displayed above are based on latest data collected.
For more information visit www.intechopen.com

Chapter 12

Knowledge-Based Assignment Model for Allocation of Employees in Engineering-to-Order Production

Matjaz Roblek, Maja Zajec and Benjamin Urh

Additional information is available at the end of the chapter

http://dx.doi.org/10.5772/intechopen.70073

Abstract

In today's rapidly changing business environment, it is necessary to react promptly in response to the product changes that happen constantly in an Engineering-to-Order production environment. Very often, there is not sufficient time to educate employees regarding new and necessary knowledge. If we insist on the standardization of a process execution, the process always requires appropriate knowledge from among available employees. In this chapter, an option for adjusting processes to available knowledge is studied. Following calculations, it was concluded that a partial corruption of a perfect process leads to a better knowledge alignment of employees. At first, with the corruption of a perfect process, its efficiency is decreased, but with better knowledge alignment, process efficiency is consequently increased to a level better than the original one. The optimization model presented in this chapter is based on a modified classic assignment problem and it includes a numerical example based on the data of ETO company. We proved our findings from the aspects of balance, employee capacity load and process efficiency.

Keywords: knowledge allocation, optimization model, activity-cutting principle, ETO

1. Introduction

Global competitiveness requires constant innovations of products and processes, which inherently require changes on the part of production companies. Management of these changes is especially important for those companies for which the production of new products is a regular business, that is, for which every customer requirement is so unique that it requires for the integration of research and development (R&D) department employees to a certain level. Linking of sales, R&D and production in such way is called an 'Engineering-to-Order

INTECH
open science | open minds

© 2017 The Author(s). Licensee InTech. This chapter is distributed under the terms of the Creative Commons Attribution License (http://creativecommons.org/licenses/by/3.0), which permits unrestricted use, distribution, and reproduction in any medium, provided the original work is properly cited. CC BY

production strategy' (ETO). Products in ETO production have a complex structure and a customer-specified production that is treated as a project. These projects are generally unique and were never previously executed. Therefore, it is impossible that they be handled with existing standard project activities. Problems with the allocation of employees appear in the first activities of the ETO production project, in which activities require a high level of innovation, and the project requires a proper knowledge allocation prior to capacity allocation. Of course, the management needs both allocation views, but the knowledge aspect is more important when dealing with new product or technology changes. The typical question before executing each ETO project is: Do we have appropriate knowledge to do that?

Knowledge is an element of the employees and also an element of the activities of business processes [1]. In Make-to-Stock (MTS), production activities are highly specialized and require a small set of required knowledge. In ETO production, employees execute many activities with a large set of required knowledge. Due to salary requirements, the human-resource-required knowledge is linked to the work position definitions [2]. The management goal is to optimize the required knowledge of work positions and the current knowledge of employees. With every product or process change, the knowledge structure of the work position is changed. If changes are permanent, there will be a continuous searching for new appropriate employees. However, what if the process of change was adjusted so that it took into consideration currently available knowledge? These employees are the only source that is available at the time a new product requires new knowledge in the process. What if the capacity load of each employee's knowledge and not just the employee's capacity in general were taken into consideration?

2. Literature review

In literature, this kind of optimization problem is classified as the worker assignment problem [3]. Applications of this problem are matching employees on work positions, where the required knowledge of work positions is compared to the actual knowledge of known employees [4]. The optimal solution (objective function) depends on the global minimum of the current knowledge deficit or the global maximum of the current knowledge surplus.

In a real environment, production processes are complicated and diverse. Almost every product and its production technology require modification of its objective function or modification of the entire optimization problem. Even if there is production of the same product in different locations, there will be modification needs, despite work standardization efforts. During process execution (over several years), the optimization problem also changes because of expected and unexpected events, such as production errors, economic opportunities and new arrangements. These events are sometimes very important for optimization. In the case of the presence of a more important and/or urgent business event, their importance for optimization disappears, and their priorities for optimization are changed. Therefore, there are many specific solutions for the worker assignment problem in the literature. Some solutions are case specific while other are made in an attempt to be universally applicable. Depending

on the complexity of the worker assignment problem, researchers implement different optimization methods: mathematic programming models (linear, non-linear, integer), genetic algorithms and heuristics.

The following research has been used as a background for the worker assignment problem in this chapter. From the perspective of tasks, Azizi and Liang [5] developed an integrated approach to the worker assignment problem. Their dominant assignment problem includes workforce flexibility acquisition and task rotation. They used a constructive-search heuristic method and set the objective to minimizing the total cost including the incremental cost of new training cost, flexibility cost and productivity loss cost. The learning effect in the worker assignment model was also the subject of research in a project task scheduling problem [6]. They used a mixed non-linear integer program, solved by a proposed genetic algorithm. The objective function was to minimize outsourcing costs. From the task perspective, there is optimization model of task allocation and knowledge worker scheduling [7]. The purpose of this model is to assign knowledge workers to every task and arrange them (the tasks) in order to minimize the total time required to finish all projects. Their optimization is based on the Ant Colony algorithm as an optimization technique [8]. Nembhard [9] uses a heuristic approach for assigning workers to tasks that is based on individual learning rates.

There are also worker assignment models originating in production layout and shifts. McDonald et al. [10] developed a worker assignment model to evaluate a lean manufacturing cell, using a binary integer programming model that is solved using a branch-and-bound approach. The objective of this model is to minimize net present costs (initial training costs, incremental training costs, inventory costs and cost of poor quality). Previously, a model of worker assignment considering technical and human skills in cellular manufacturing was developed [11]. It is classified as mixed-integer programming problem. The objective of the model is to maximize profit, where profit has three components: productivity, quality costs and training costs. Ingolfsson et al. [12] combined integer programming and the randomization method to schedule employees by using an integer programming heuristic to generate schedules; they used the randomization method to compute service levels. They described a method to find low cost shift schedules with a time-varying service level that is always above a specified minimum.

There are worker-assigning models that deal with the satisfaction of workers. Brusco and Johns [13] defined a model of staffing a multi-skilled workforce with varying levels of productivity. They applied integer linear programming model with the objective of minimizing workforce staffing costs subject to the satisfaction of minimum labour requirements across the planning horizon of a single work shift. Mohan [14] created a model of scheduling part-time personnel with availability restrictions and preferences to maximize employee satisfaction. He proposed an integer programming model to maximize employee satisfaction (while considering their seniority and availability) and to meet the demand requirements for each shift. A branch-and-bound algorithm was used for this.

From the perspective of competencies [15], there is a competence-driven staff assignment approach that is based on a stochastic working status model. This model seeks to minimize

employee wages and maximize strategic gains of the company from the increment of desirable competencies. The authors used a genetic algorithm as the optimization method. Competencies are also used in a model that seeks to maximize a weighted average of economic gains from projects and strategic gains from the increment of desirable competencies. As a sub-problem, the scheduling and staff assignment for a candidate set of selected projects is also optimized [16]. The authors used non-linear mixed-integer program formulation for the overall problem and then proposed heuristic solution techniques composed of a greedy heuristic for the scheduling and staff assignment, and alternative 'meta' heuristics for the project selection.

Recent studies are showing that the worker assignment problem is still important subject of research. Grosse et al. [17] designed a framework for integrating human factors into planning models. Crawford et al. [18] showed application of worker assignment problem in project scheduling and they innovated optimization approach using hyper-cube framework. A similar problem that discuses assignment of health care staff to tasks using fuzzy evaluation method was presented by Mutingi et al. [19]. Olivella et al. [20] gave emphasis on the cross-training goals, while Senjuti et al. [21] optimized the assignment of tasks to workers by proposing efficient adaptive algorithms. Current efforts are dealing with additional variables in creating the perfect optimization framework (knowledge, cross-training, etc.), or in finding the best optimization algorithms for solving worker assignment problem. They still assume that tasks are allocated to workers as 'they are'. Our effort was to study the effect of task redefinition in the meaning of splitting tasks on smaller parts with the goal of better knowledge alignment. From the organizational view, especially when the creative job must be done (like in ETO companies), the list of required tasks is created according to the available knowledge of workers, and the new definition of tasks is a subject of optimization output. This was our main theoretical issue that is described as real business example as follows:

- At first, there is an optimal worker assignment on the work position requirements of ETO company.
- Then, one or many workers leave the company at their own initiative. Because of the high level of customer demand, there is no time to re-educate the existing employees, and management will not approve recruiting new employees.
- The quality of process output (product) must remain at the same quality level. It is assumed that the quality can be reached only with proper knowledge.
- The quantity of process output may be reduced.

This is a typical example of a company that needs to increase the use of its internal sources. Many cases have been found in practice in ETO companies in which the management solved the problem of outgoing knowledge with reorganization of internal employees rather than with the simple extension of employees' existing capacities, for example, overtime work [22]. We also set two assumptions that were not subjects of this research: first, we accepted that in ETO production, business processes are constantly changing and, therefore, knowledge requirements are also changing. Second, because these are simulations, the relation between knowledge and the process efficiency was accepted: if employees have proper knowledge for

the execution of activities, then these activities are performed faster. This has an impact on better efficiency of the whole process if that activity is simultaneously a process bottleneck [23].

3. Method

The key solution of adjusting processes to the current knowledge lies in the theory of business process management [24], in which the main problem of achieving a short process throughput time lies in the waiting times among different work positions that are the consequence of unbalanced work. This problem is insignificant if the entire process is executed by only one employee who occupies one work position, because there are no work position breaks [25]. This works only in small companies. Large business systems are complicated: they have many business processes with diverse knowledge requirements (e.g. ETO production) and require many employees with different types and levels of knowledge. Work is divided into activities between different work positions. Each work position has its own knowledge requirements. In this case, management needs control over the specific knowledge and over the number of the work position changes, and must keep them at the 'desired' minimum level so that the optimal process efficiency and the work balance are reached. The problem is also in the required and actual capacity of the specific knowledge. The process output quantity reflects the frequency of activity executions [26]. From a previous description of the principle of minimization work position breaks, when the capacity of one employee is exceeded, an additional employee who can perform all activities in the process is required. Such a broadly educated employee is too expensive, and this solution is thus irrational. Therefore, the process is divided into activities (tasks) among many work positions with the least expensive employees. Management creates work positions with a simple and complex knowledge structure. However, dividing work in too many work positions slows down the process: the throughput time is extended because of the additional waiting time each time the work position is switched.

Regarding the theory of work position breaks, work position knowledge structure and employee knowledge capacity, we modified our previously published model [22]. **Figure 1** shows the steps of upgraded conceptual model. In the new model, we are measuring the effect of the partial corruption of a perfect process regarding better current knowledge alignment from the perspective of employee capacity load and from that of process efficiency; with corruption of the process, we are decreasing its efficiency due to new additional work position breaks, but with better knowledge alignment we are again increasing the process efficiency.

3.1. Measuring optimal knowledge alignment

We can observe in practice that if the current knowledge deficit is below the required knowledge, the result is less efficient work. Surprisingly, even an excess of actual knowledge over

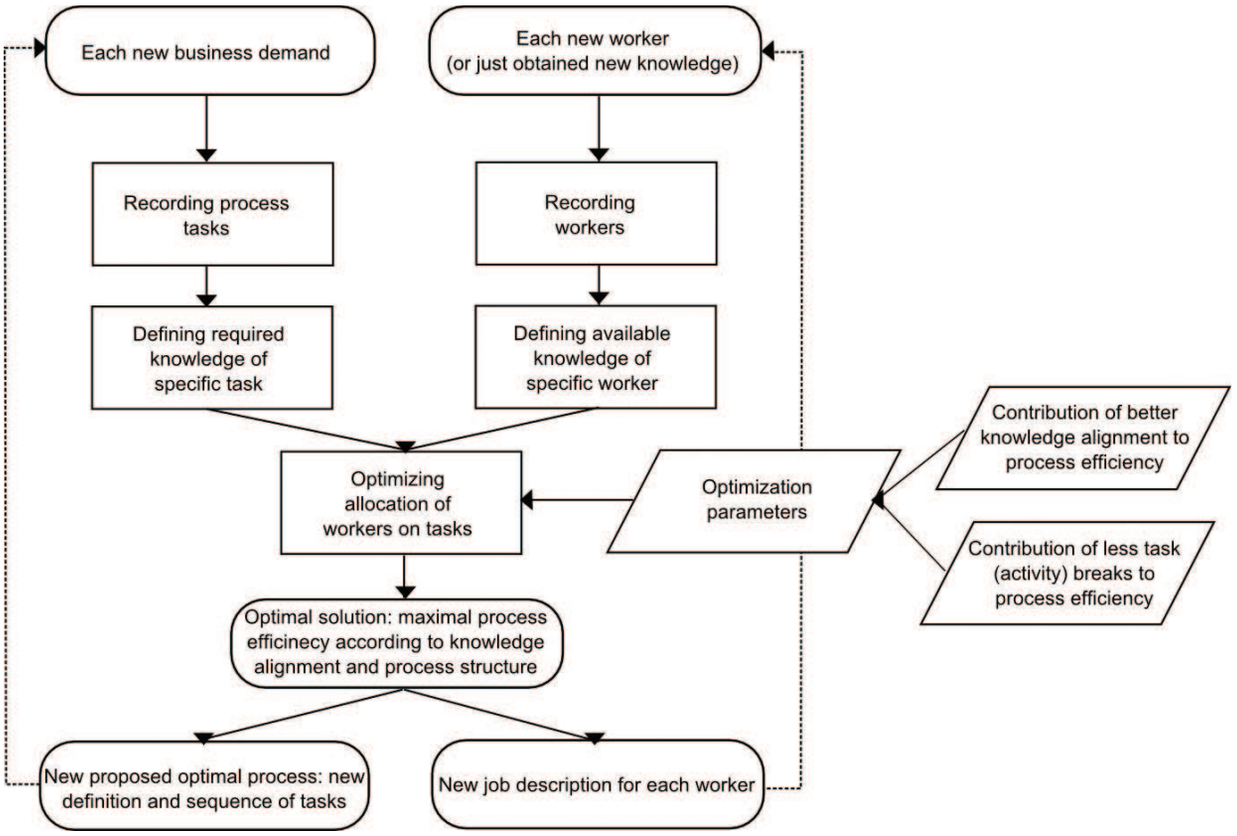

Figure 1. Knowledge-based assignment conceptual model.

the required level of knowledge has the same result of over-educated and intelligent employees becoming bored when they are executing routine activities [22]. Therefore, we modified a classic assignment linear integer problem of Kolman and Beck [3]. In the original optimization model (Eq. (1)), the value c_{ij} represents the added value if employee i is allocated to work position j and the optimization function maximizes a profit.

$$max\ z = \sum_{i=1}^{n} \sum_{j=1}^{n} c_{ij} \cdot x_{ij} \tag{1}$$

We replaced the added value with the minimal knowledge deficit/surplus (absolute) gap of n key required knowledge K_k. That means if we allocate an employee with his/her actual knowledge that is nearest to required knowledge on the work position (neither below nor above) then we have attained optimal knowledge alignment. The idea is to minimize the overall absolute key knowledge gap in the processes of the specific company (Eq. (2)).

$$min\ z = \sum_{i=1}^{n} \sum_{j=1}^{n} \left\{ \left(\sum_{k=1}^{n} \frac{|K_k|}{n} \right)_{ij} \cdot x_{ij} \right\} \tag{2}$$

where $i\ldots n$ = number of compared employees; $j\ldots n$ = number of different work positions; $k\ldots n$ = number of compared key knowledge; and $|K_k|$ = absolute difference between required and actual knowledge K.

In case of a new required ETO production change, this model can be used in the following situations:

- If there is an 'open' set of available employees, all potential candidates in the optimization function can be matched. If the candidate knowledge gap is excessive (the appropriate level was not a subject of this research) the candidate is inappropriate for the work position because the performed work will be less efficient. This action has certain inherent costs (hiring, firing).
- If there is time to provide additional education to employees, then the knowledge deficit can be decreased with additional knowledge. This action has additional education and training costs.
- Existing employees can also be re-assigned on existing work positions so that the company knowledge alignment is optimal.

Are these all the possible management actions?

3.2. Measuring the corruption of a perfect process

As an innovation, the effect of a partial corruption of a perfect process was tested, including its impact on a better knowledge alignment with the limitation that the set of employees must remain untouched. The hypothesis was that with a corruption of the process, a better knowledge alignment can be achieved and, consequently, the process efficiency can be increased, despite a simultaneous decrease of its efficiency due to new additional work position breaks. Moreover, there must be a point in the process corruption procedure after which the inefficiency of the process exceeds the benefits of better knowledge alignment.

The effect of work position breaks in the process is measured by structural index K_{wpb} (Eq. (3)) [27]. This is a common key performance indicator in the theory of analysing business processes.

$$K_{wpb} = \frac{C_{wp}}{P_a} \cdot 100 \tag{3}$$

C_{wp} counts all work position breaks in a specific process. P_a counts all activities in that process. In this theory, the process slightly stops each time the next process activity is performed by different employee (on a different work position). This is one of practical causes for additional waiting time in the structure of throughput time of the process. There can be up to $n - 1$ work position breaks in a process of n sequential activities. According to the total number of all process activities, a small number of work position breaks means that the process is more efficient.

In practice, poor work quality can be found in the process due to inappropriate knowledge alignment. This generates additional feedback loops, activities are repeated and the result is additional work position breaks. Determining the causes of additional activity breaks is not a subject of this research.

3.3. Linking knowledge optimization and work position breaks

From the perspective of real business in ETO production, especially in this time of global economic crisis, accessibility to newly required knowledge is greatly limited due to extra educational costs. Downsizing also means that processes must be executed with fewer employees but at the same time the level of product quality must remain equal to previous process executions. Management typically reacts with reorganization of employees on activities. Furthermore, because we cannot split 'the human body', his or her structure of knowledge and the time capacity of that knowledge cannot be optimal for current (ideal) process. In the theory, the problem can be easily solved if we have all current employees with all required knowledge of the process.

In ETO production, there are many specialists (e.g. electrical engineers, mechanical engineers, software engineers) with one or two dominant fields of knowledge of very high quality or strength, and few employees with wide spectra of high quality knowledge (senior engineers, mechatronics), because the latter are too expensive. However, they are also key employees for the ETO production; they have the big picture over each new product, and they can control the efficiency and quality of the overall production process. They are never 'bottlenecks' in the process with regard to knowledge, but they can be problematic with regard to the available time capacity of his/her specific required knowledge, because they are involved in many processes (ETO projects).

This phenomenon is also a result of the accumulation of many small organizational changes in processes over time. When the company was established (or after process re-engineering project), processes and work positions were optimally designed for execution, employees were carefully selected and their knowledge was appropriate for knowledge requirements of work positions (**Figure 2**).

Over time, new activities were slowly added to work positions, thus generating newly required knowledge. These changes were so small at the beginning that the management did not recognize them as knowledge problems or capacity problems. They had no effect on the employees except that the work position received one or two new key pieces of knowledge that employees had to obtain. After a few years of small changes, the work position and their key knowledge structure had expanded in such a way that the management and the employee did not know which pieces of knowledge of the work position were key for business success (e.g. a designer in ETO production is working 30% of his capacity on designing, 40% of the time he is occupied with routine paper work and another 30% he is attending meetings; if we require 100% design work, then this person's design knowledge is a capacity bottleneck).

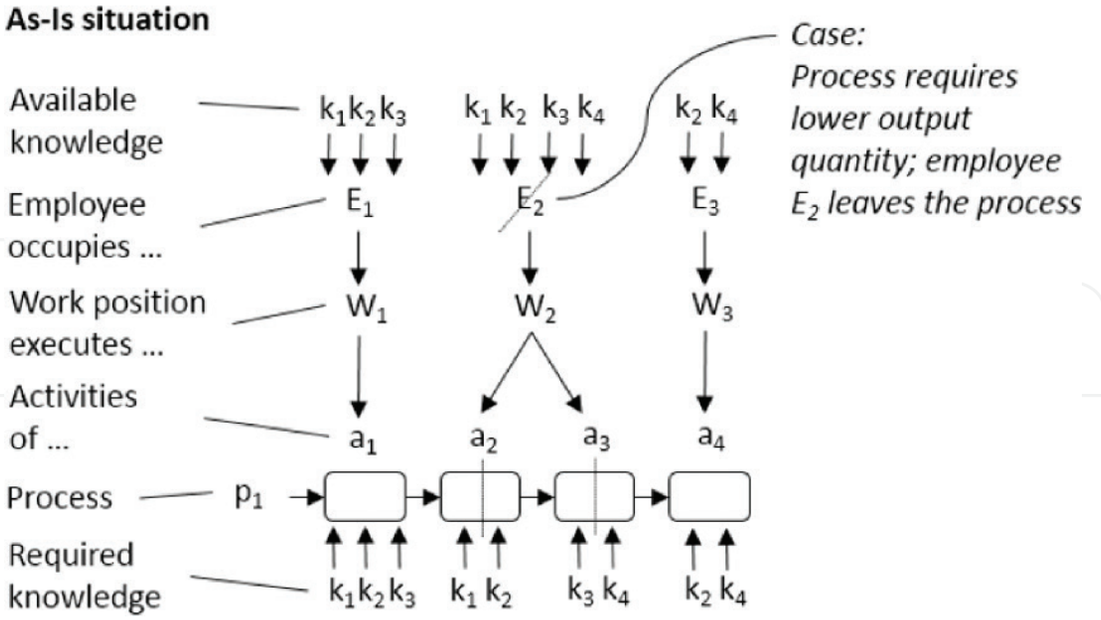

Figure 2. Explanation of cutting activities when employee leaves the process.

For such cases, we created a process and knowledge algorithm that is connected with a Key performance indicators (KPI) that measures process corruption as follows:

1. We must have input data of current processes (As-Is), their activities and times, current work positions, required knowledge, current employees and their actual knowledge.
2. Then, we test the impact of employee reduction on the knowledge structure of process. We can start with required knowledge that is recognized as a process bottleneck or with knowledge that is missing at the new activity executor.
3. In first case, we reduce the process activity until only work with knowledge that was bottlenecked remains (i.e. knowledge that is available by only one employee). The removed parts of activity with removed knowledge are distributed among other employees in the process until the optimal knowledge alignment is reached (Eq. (2)). If some knowledge is insufficient with one employee, the part of activity requiring this knowledge is given to an employee who can cover it successfully. Then, we repeat this procedure until optimal process knowledge alignment is reached.
4. At the same time, we measure the impact of the activity-cutting principle on the process (Eq. (3)). Because the better knowledge alignment improves the process efficiency, and the activity-cutting principle reduces the process efficiency, the algorithm serves as a 'trading' point when we are balancing and allocating employee knowledge on activities within his/her available time capacity (**Figure 3**)
5. The final result (output) is a new process (To-Be) that is feasible.

Such a reorganized process is reengineered on the basis of knowledge.

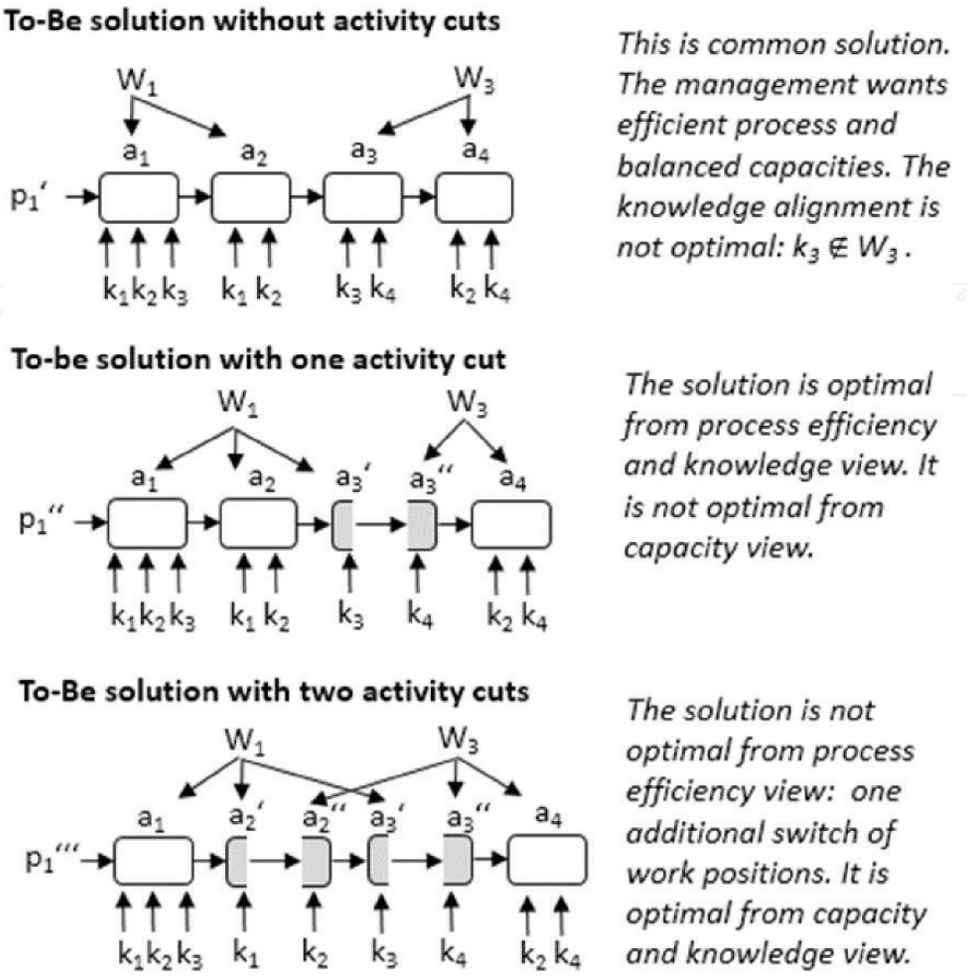

Figure 3. Possible outputs of algorithm for optimal knowledge alignment in ETO production.

4. Input data

4.1. Processes, process activities, work positions and required knowledge

In ETO production, at first sight, almost every product has its own and unique production process (routing). The fact is that activities (operations) among different processes are almost the same with regard to required knowledge. They differ mostly in the time required for execution. Because each product has its unique structure (bill of material), the process is named in practice as a project and its operations are named as activities. However, from the top-down approach, each project in ETO production has almost the same set and the same sequence of project phases (with many sub-activities), for example, (1) preparation, (2) design, (3) construction, and (4) testing. Therefore, it can be assumed that we have a standard form of the process (with activities) for almost all new products.

The same process activity could appear in a structure of many different processes and it is usually performed by the same work position (e.g. the same quality control activity with the same control parameters and tools for the whole product group). Moreover, one work position executes many activities. Until the system is well organized, a work position aggregates

activities with approximately the same required set of knowledge. We defined that the required knowledge of a specific work position is represented as a set of knowledge from all executed activities. The sets of required knowledge of specific activity and their strength (Likert scale from 1 to 5; 5 meaning very important) are defined by the company's internal and external experts. If a specific piece of knowledge is required for the execution of many activities, the model uses its maximal value as a required strength.

Complex work positions have a wide range of required knowledge, many of unimportant strength. Reducing the amount of various required knowledge can simplify the calculations. Simplification was achieved with the definition of key knowledge K_k for each work position. If the strength of specific knowledge is above a specific level, it is treated as key knowledge of that work position.

In practice, the above-described idea of capturing process activities and their required knowledge can be used for documenting As-Is processes and, more importantly, for predicting future products, To-Be processes and their expected required knowledge. This is of great importance for planning required knowledge of future ETO production. We can analyse the following:

- Which activity among all activities of specific process is the most important from the key knowledge aspect, for example, to find the activity that is the 'knowledge bottleneck' in a process. Then we can combine this information with activity throughput rate and find an activity that is the real-time capacity bottleneck in the process.
- Which process (from among all of them) is the most important from the aspect of key knowledge, for example, for ranking all processes on the basis of the knowledge required (i.e. which process is currently the most important/crucial for the company from the knowledge view; this is important information for any ETO company in addition to the information regarding which process is crucial from capacity aspect).
- In ETO production, each work position typically executes many different activities in many different processes. Therefore, we are interested which work position has the highest required strength of all key knowledge, for example, we can use this information as a basis for creating salary grades.
- Which work positions in the company are exceptional from the knowledge aspect; a work position that has only one key type of knowledge but with a high required strength (e.g. CNC programmer) and which work positions are universal, that is, have many key types of required knowledge (e.g. ETO project manager).
- Which type of knowledge is dominant (repeats at every executed activity) for the specific process (short-term view) and for the whole company (long-term view).

If we have proper data on all the above mentioned entities (processes, activities, work positions, knowledge requirements with required strength) for the present time, and if we have good knowledge requirements (definitions) of new products (especially required technology and activities), we can then simulate all future knowledge requirements in advance. Therefore, we can determine differences, for example, which work position must be knowledge-reconstructed in the future; consequently, we can define projected mandatory changes in a structure of actual knowledge (employees).

4.2. Employees, actual knowledge and knowledge gap

Employees represent the basis for gathering current knowledge. There are many approaches to prove that an employee possesses specific knowledge and what the quality of it is (strength, level). In our approach, the 360° feedback method [28] was used. We used a list of all key required knowledge and assessed all employees (Likert scale from 0 to 5; 0 means knowledge not available). We gave employees the opportunity to extend this explicit knowledge with their tacit knowledge. In the context of our model, the term 'tacit' means the knowledge of an employee that is currently unknown to the company. Knowing about tacit knowledge is essential information when new processes have requirements for new types of knowledge. In practice, for optimization, it is also recommended that we have the knowledge data about potential candidates for employees.

The last step of input data preparation is a calculation of the key knowledge gap: each employee is compared to all work positions. We used the criterion c_{ij}, explained in Eq. (2). Any deviation of actual knowledge over and below the required knowledge is considered to be inappropriate and will lower process efficiency (**Table 1**).

Table 1 shows a numerical example of matching the actual knowledge from *k*1 to *k*10 of employee *E*1 on activities from *a*1 to *a*7 of work position *W*1 (e.g. Product Manager of ETO project). The example is based on the real data of ETO company, Iskratel. Negative values (grey cells) represent deficits of employee knowledge strength compared to the required knowledge of a work position. The top rows represent activities of the work position with a

	Activities	a_1	a_2	a_3	a_4	a_5	a_6	a_7
Knowledge		-2.48	-2.98	-6.64	-1.2	-0.11	-0.14	-0.27
k_1	-0.40	0.60	-0.40	2.27	0.00	1.77	1.03	2.04
k_2	0.0	1.19	1.18	1.57	0.60	2.40	2.26	2.73
k_3	-0.62	-0.24	-0.38	0.23	0.60	1.62	0.26	1.51
k_4	-4.54	-0.79	-1.00	-1.50	-1.00	-0.11	-0.14	1.44
k_5	-1.20	1.77	-1.20	1.70	2.20	1.37	0.20	0.31
k_6	-0.97	0.41	0.98	-0.97	0.40	0.59	0.06	0.64
k_7	-1.54	0.76	0.40	-1.27	1.40	1.23	0.69	-0.27
k_8	-2.45	-1.45	1.00	-1.00	0.60	1.00	1.57	1.33
k_9	-1.07	0.20	0.47	-0.87	-0.20	1.08	2.80	2.58
k_{10}	-1.03	1.15	0.13	-1.03	0.40	1.41	2.80	2.36

Table 1. Matching required and actual knowledge.

sum of negative values. We can identify activities that the employee is not suitable to execute (e.g. *a*1, *a*2, *a*3). The left column represents the required knowledge with the sum of negative values. We can identify the lack of employee knowledge (e.g. *k*4, *k*8).

In practice, we could integrate in our model the effect of learning and forgetting knowledge over time (decreasing knowledge strength if employee is not using that type of knowledge in processes for a long time). Because of model simplicity, this was not a subject of this research.

5. Results

We demonstrated the capabilities of our model on a small section of the real process that was described in **Figure 3**. This numerical example is based on the data of company Iskratel. We performed simulations of this example with the same tools as the calculations of real cases (**Tables 2** and **3**). Definitions of processes were recorded in the repository of Aris Toolset software [29]. Definitions of actual and required knowledge were recorded with MS Share Point and MS SQL. All data were then exported to the MS Excel analytical tool and solved with the WhatsBest [30] add-on. MS Excel was also used as reporting tool.

5.1. Input data of simulation scenarios

We prepared four simulation scenarios as follows:

- Scenario 0: As-Is situation. In the current state, there are three employees assigned to their own work positions, and the processing of four activities with four different types of knowledge.
- Scenario 1: employee on work position w_2 left the company. His/her activity a_2 is assigned to w_1 and a_3 to w_3. This is typical management decision that does not generate an additional work position switch in the sequence of activities.
- Scenario 2: use of our algorithm: achieving better knowledge alignment. Employee on w_3 has no knowledge K_3 that is required for execution of activity a_3; therefore, we split activity on a'_3 and a''_3.
- Scenario 3: is same as scenario 2, with one additional activity cut: we are searching for better balance of capacities between w_1 and w_3. We split activity a_2 and we add knowledge K_2 to work position w_3.

We can observe the things as follows:

(i) In scenario 1, the result of management action on knowledge distribution among work positions: Knowledge K_1 and K_2 are moved from w_2 to w_1. Knowledge K_3 and K_4 are moved from w_2 to w_3. In case this is the same knowledge, we used the maximal strength as the required strength.

(ii) In scenario 2, the result of optimization algorithm: according to As-Is situation, we moved from w_2 to w_1 knowledge K_1 and K_3. This caused the rise of the strength of both

Simulation scenarios

Scenario 0	Scenario 1	Scenario 2	Scenario 3

I. Input data: processes (ARIS EPC) and activities (a_n), work positions (w_n) and required knowledge (K_n)

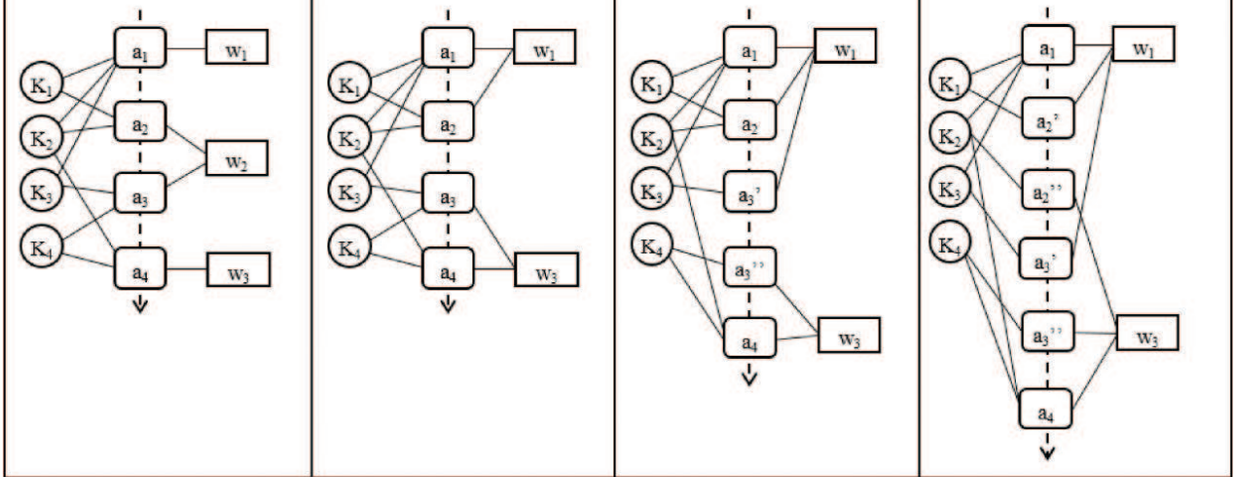

II. Input data: actual knowledge strength of employees (Likert scale 0 to 5)

	E_1	E_2	E_3
K_1	3	5	0
K_2	2	3	5
K_3	1	2	0
K_4	0	1	2

	E_1	E_3
K_1	3	0
K_2	2	5
K_3	1	0
K_4	0	2

	E_1	E_3
K_1	3	0
K_2	2	5
K_3	1	0
K_4	0	2

	E_1	E_3
K_1	3	0
K_2	2	5
K_3	1	0
K_4	0	2

III. Input data: required knowledge strength of work positions (Likert scale 0 to 5)

	w_1	w_2	w_3
K_1	4	5	0
K_2	2	2	5
K_3	1	3	0
K_4	0	1	2

	w_1	w_3
K_1	**5(i)**	0
K_2	2	5
K_3	1	**3(i)**
K_4	0	2

	w_1	w_3
K_1	**5(ii)**	0
K_2	2	5
K_3	**3(ii)**	0
K_4	0	**2(ii)**

	w_1	w_3
K_1	**5(iii)**	0
K_2	2	**5(iii)**
K_3	**3(iii)**	0
K_4	0	**2(iii)**

Table 2. Input data of simulation scenarios.

types of knowledge for w_1. We moved from w_2 to w_3 only knowledge K_4, because the newly required strength is below the current required strength so it remains as it was for w_3.

(iii) In scenario 3, the new activity cut did not cause any change in knowledge requirements (and strength) of w_1 and w_3 according to scenario 2.

5.2. Simulation results

We can see in Scenario 2 (implementing activity-cutting principle) that we decreased the knowledge gap in Scenario 1. Now, we must 'merge' the results of optimal knowledge alignment to determine the impact of using the activity-cutting principle on classic production optimization parameters (Scenario 3). Otherwise, we will break some lean manufacturing principles, for example, work balancing or eliminating waiting times. We added additional input data of As-Is process in **Table 4**.

http://dx.doi.org/10.5772/intechopen.70073

Scenario 0	**Scenario 1**	**Scenario 2**	**Scenario 3**
I. Comparison of actual and required knowledge (absolute knowledge gap ; $c_{i,j}$)			
E_1 E_2 E_3 w_1 K_1 -1 1 -4 K_2 0 1 3 K_3 0 1 -1 K_4 / / / $C_{i,j}$ **0.3 1.0 2.7** w_2 K_1 -2 0 -5 K_2 0 1 3 K_3 -2 -1 -3 K_4 -1 0 1 $C_{i,j}$ **1.3 0.5 3.0** w_3 K_1 / / / K_2 -3 -2 0 K_3 / / / K_4 -2 -1 0 $C_{i,j}$ **2.5 1.5 0.0**	E_1 E_3 w_1 K_1 -2 -5 K_2 0 3 K_3 0 -1 K_4 / / $C_{i,j}$ **0.7 3.0** w_3 K_1 / / K_2 -3 0 K_3 -2 -3 K_4 -2 0 $C_{i,j}$ **2.3 1.0**	E_1 E_3 w_1 K_1 -2 -5 K_2 0 3 K_3 -2 -3 K_4 / / $C_{i,j}$ **1.3 3.7** w_3 K_1 / / K_2 -3 0 K_3 / / K_4 -2 0 $C_{i,j}$ **2.5 0.0**	E_1 E_3 w_1 K_1 -2 -5 K_2 0 3 K_3 -2 -3 K_4 / / $C_{i,j}$ **1.3 3.7** w_3 K_1 / / K_2 -3 0 K_3 / / K_4 -2 0 $C_{i,j}$ **2.5 0.0**
II. Employees allocation optimization (problem specification)			
Variables: $x_1 = E_1$ occupies W_1 $x_2 = E_2$ occupies W_1 $x_3 = E_3$ occupies W_1 $x_4 = E_1$ occupies W_2 $x_5 = E_2$ occupies W_2 $x_6 = E_3$ occupies W_2 $x_7 = E_1$ occupies W_3 $x_8 = E_2$ occupies W_3 $x_9 = E_3$ occupies W_3 Optimization function: $Z_{min} = 0{,}3x_1+1x_2+2{,}7x_3+1{,}3x_4+$ $0{,}5x_5+3x_6+2{,}5x_7+1{,}5x_8+0x_9$ Boundaries functions: E_1 can occupy: $x_1+x_4+x_7=1$ E_2 can occupy: $x_2+x_5+x_8=1$ E_3 can occupy: $x_3+x_6+x_9=1$ W_1 must be occupied: $x_1+x_2+x_3=1$ W_2 must be occupied: $x_4+x_5+x_6=1$ W_3 must be occupied: $x_7+x_8+x_9=1$	Variables: $x_1 = E_1$ occupies W_1 $x_2 = E_3$ occupies W_1 $x_3 = E_1$ occupies W_3 $x_4 = E_3$ occupies W_3 Optimization Function: $Z_{min} = 0{,}7x_1+3x_2+2{,}3x_3+1x_4$ Boundaries Functions: E_1 can occupy: $x_1+x_3=1$ E_3 can occupy: $x_2+x_4=1$ W_1 must be occupied: $x_1+x_2=1$ W_3 must be occupied: $x_3+x_4=1$	Variables: $x_1 = E_1$ occupies W_1 $x_2 = E_3$ occupies W_1 $x_3 = E_1$ occupies W_3 $x_4 = E_3$ occupies W_3 Optimization Function: $Z_{min} = 1{,}3x_1+3{,}7x_2+2{,}5x_3+0x_4$ Boundaries Functions: E_1 can occupy: $x_1+x_3=1$ E_3 can occupy: $x_2+x_4=1$ W_1 must be occupied: $x_1+x_2=1$ W_3 must be occupied: $x_3+x_4=1$	Variables: $x_1 = E_1$ occupies W_1 $x_2 = E_3$ occupies W_1 $x_3 = E_1$ occupies W_3 $x_4 = E_3$ occupies W_3 Optimization Function: $Z_{min} = 1{,}3x_1+3{,}7x_2+2{,}5x_3+0x_4$ Boundaries Functions: E_1 can occupy: $x_1+x_3=1$ E_3 can occupy: $x_2+x_4=1$ W_1 must be occupied: $x_1+x_2=1$ W_3 must be occupied: $x_3+x_4=1$
III. Optimization results (minimal absolute knowledge gap and employees allocation)			
Z_{min} = **0.8** if x_1=1. x_5=1 and x_9=1	Z_{min} = **1.7** if x_1=1 and x_4=1	Z_{min} = **1.3** if x_1=1 and x_4=1	Z_{min} = **1.3** if x_1=1 and x_4=1

Table 3. Simulation results.

- The first assumption (i) in our evaluation is the amount of time that is added to process throughput time each time we change the work position (sending work from me to you etc.). In a real case, this could be measured exactly but in our demonstration we assumed a fixed value of 3 min.
- The second assumption (ii) in our evaluation is the amount of time that is added to process throughput time because of non-optimal knowledge alignment. In the As-Is process, we

Scenario 0: As-Is Process

Process Times (in minutes)

	Activity sequence →			
Knowledge sequence ↓	a_1	a_2	a_3	a_4
K_1	12			
K_2	15			
K_3	3			
K_1		5		
K_2		10		
K_3			7	
K_4			8	
K_2				10
K_4				20
Total activity time	30	15	15	30
Work position	w_1	w_2		w_3
(i)Moving time		3		3
(i)Planned throughput time	30+3+15+15+3+30 = **96 min**			
(ii)Expected throughput time	(0.8/0.1)×1% = 8% => 96 min × 1.08= **103.68 min**			
Process Throughput rate per shift (450 min)	$\min \begin{cases} w_1; \frac{450}{30} = 15 \\ w_2; \frac{450}{3+15+15} \cong \mathbf{13} \\ w_3; \frac{450}{3+30} \cong \mathbf{13} \end{cases}$			
Capacity Load per shift (%)	**86.7**	**95.3**		**95.3**
Expected Efficiency	(90min/103.68min)×100 = **86.8%**			
KPI_{wpc}	(2 wpc / 4 activ.)×100 = **50%**			

Table 4. Production parameters of As-Is process.

know that we have 0.8 by the Likert non-optimal knowledge alignment. If the times in this table were measured without being aware of this knowledge gap then the real throughput time is longer. In a real case, we could measure this by comparing the knowledge gap and the difference between planned and real production times (we have to exclude other causes for time extension first). In our demonstration, we assumed that every 0.1 of knowledge gap adds 1% to planned process throughput time.

http://dx.doi.org/10.5772/intechopen.70073

6. Discussion

The main specialty of our model is that we permit changes of the process because the actual knowledge is not appropriate for it. However, we do not allow changes in the sequence of activities; we allow only changes in the sequence of using employees. The results are new partial activities in the process; consequently, the process workflow is jumping forwards and backwards between employees.

In our model, we removed all unnecessary knowledge from the work positions that were process 'bottlenecks' and replaced it with the new process structure; this was done by taking into consideration the availability of the actual knowledge of employees. The entire individual employee time capacity is now focused only on the utilization of knowledge that is bottlenecked. Other required knowledge in the process that is also present in other employees is removed from that work position. Employee capacity is now free of all non-bottleneck knowledge, and this raises its capacity availability.

In our simulations, we used process time indicators to verify our assumption, even if we know, on the basis of real projects [31, 32], that the best improvements in the ETO production are achieved on the process quality indicators. Time indicators are improved indirectly as a result of better product quality: fewer aftermarket repairs means less additional invested time in the total production time of the specific product. The starting point of all scenarios is the departure of one employee from the original process (Scenario 0). In Scenario 1, we reacted by implementing the lean manufacturing principle of capacity balancing: the work of the lost employee is divided among remaining employees on the basis of capacity levelling without additional work position breaks. This is a common management decision, and it is expressed as a load capacity per shift (%) indicator in **Table 4**. This decision produced the knowledge gap of 1.7 (**Table 3**).

In Scenario 2, we used our model with the activity-cutting principle, and we reduced the knowledge gap by 0.4 or 23.5% (**Table 3**). Most time indicators were also improved (**Table 5**), except for the unbalanced load capacity per shift (%) indicator, and a lower process throughput rate (from 9 to 8 products per shift). Both indicators would have negative impact in mass or serial production, but according to the requirements of the ETO production it is more important that we achieved the desired quality of knowledge for production process because there are no repetitions (rather only unique, one-time process executions). Management can balance these indicators and make the decision that is adopted for a specific process 'case'.

In Scenario 3, we tested the total ignorance of the Lean Manufacturing principles, and we performed additional activity cuts for searching for even better knowledge alignment. We did not achieve a lower knowledge gap (**Table 3**); we also worsened all time indicators according to Scenario 2 (**Table 5**). This indicated that there is a point in the repetition of activity-cutting procedure after which the process becomes so inefficient that is better to hire a new employee if the knowledge gap is still too high for achieving the appropriate quality of ETO products. Where that point is, what the gap should be and whether its value is of universal use or case sensitive are all subjects of future research.

Scenarios without employee on work position w2																
	Scenario 1				Scenario 2					Scenario 3						
	Activity sequence →				Activity sequence →					Activity sequence →						
Knowledge sequence ↓	a_1	a_2	a_3	a_4	a_1	a_2	a_3'	a_3''	a_4	a_1	a_2'	a_2''	a_3'	a_3''	a_4	
K_1	12				12					12						
K_2	15				15					15						
K_3	3				3					3						
K_1		5				5					5					
K_2		10				10						10				
K_3			7				7						7			
K_4			8					8						8		
K_2				10					10						10	
K_4				20					20						20	
Total activity time	30	15	15	30	30	15	7	8	30	30	5	10	7	8	30	
Work position	w_1		w_3		w_1			w_3		w_1		w_3	w_1	w_3		
Moving time			3					3				3	3	3		
Planned throughput time	**93 min**				**93min**					**99 min**						
Expected throughput time	**108.8 min**				**105.1 min**					**111.9 min**						
Process Throughput rate per shift (450 min)	$\min\begin{cases} w_1; \frac{450}{45} = 10 \\ w_3; \frac{450}{48} \cong \mathbf{9} \end{cases}$				$\min\begin{cases} w_1; \frac{450}{52} \cong \mathbf{8} \\ w_3; \frac{450}{38} = 11 \end{cases}$					$\min\begin{cases} w_1; \frac{450}{45} = 10 \\ w_3; \frac{450}{54} \cong \mathbf{8} \end{cases}$						
Capacity Load per shift (%)	**90.0%**		**96.0%**		**92.4%**			**72.9%**		**80.0%**					**96.0%**	
Expected Efficiency	**82.7%**				**85.6%**					**80.5%**						
KPI_{wpc}	**25%**				**20%**					**50%**						

Table 5. The impact of activity-cutting principle on production parameters in scenarios from 1 to 3.

7. Conclusions

In Make-to-Stock, Assemble-to-Order and Make-to-Order production, assignment models for the allocation of employees assume that tasks of production processes (or routings) are of a fixed structure. Managers believe they found the most 'efficient' process of producing products and, therefore, all current optimization models are searching for appropriate employees for that process. Small deviations between the required and the actual knowledge are resolved with alternative routing; its structure is also known and fixed in advance. All of this is possible because extra time is invested for testing and preparing optimal processes for many repetitions. Extra time is also invested for finding employees with proper knowledge for that processes. This is the case of known theoretical and practical solutions of worker assignment problem.

However, in ETO production, and consequently in all knowledge-intensive processes or case-like processes, we determined that processes are structured around the available knowledge of employees. Otherwise, the cost of searching for missing knowledge in the form of a new employee could exceed all the added value to the business. Process 'cases' are never the same and each process 'repetition' requires a process structure that is adapted to the actual knowledge and its capacity in the company; the bottleneck is not the capacity of the employee but the capacity of his/her specific actual knowledge. With the activity-cutting principle in our

assignment model, we proved that we can release the 'hidden' time capacity of employee who is the bottleneck so that we could remove all activities and consequently the knowledge that is also available with other employees from the work position. We recommend that this principle can be an option of all assignment models for the allocation of employees for ETO production and all other knowledge-intense companies. This is our main contribution to the theory of modelling worker assignment problem.

Of course, this research raises additional questions for our future work, especially in the field of practical application: is knowledge the right category in our assignment model or is it better to use all measureable work habits and personal skills [33]? There are also assumptions in **Table 4** that will need additional research and explanation. Nevertheless, our concept of redefining tasks with the goal of reaching optimal worker knowledge alignment could be used as a 'smart' reorganization principle for dynamic and real-time redefinition of processes in companies, where the standardization of tasks is not the main factor of reaching efficiency.

Author details

Matjaz Roblek*, Maja Zajec and Benjamin Urh

*Address all correspondence to: matjaz.roblek@um.si

Faculty of Organizational Sciences, University of Maribor, Kranj, Slovenia

References

[1] Kern T, Roblek M, Mayer J, Urh B. Business processes and human resources competence profiles. In: Khosrowpour M, editor. Managing Modern Organization with Information Technology; 15-18 May 2005. San Diego, CA, USA: Idea Group; 2005. pp. 1202-1204

[2] Meglic J, Kern T, Urh B, Balkovec J, Roblek M. Influence of polyvalence professionals on product development process efficiency. Strojarstvo. 2009;**51**(2):105-121

[3] Kolman B, Beck R. Elementary Linear Programming with Aplications. San Diego: Academic Press; 1995

[4] Gartner B, Mataušek J. Understanding and Using Linear Programing. Berlin: Springer; 2006

[5] Azizi N, Liang M. An integrated approach to worker assignment, workforce flexibility acquisition, and task rotation. Journal of Advanced Manufacturing Technology. 2013;**64**(2):260-275

[6] Wu MC, Sun SH. A project scheduling and staff assignments model considering learning effect. International Journal of Advanced Manufacturing Technology. 2006;**28**(11-12): 1190-1195

[7] Wang Q, Liu M. Optimization of task allocation and knowledge workers scheduling based on ant colony algorithm. In: International Symposium on Intelligence Information Processing and Trusted Computing; 2010. pp. 386-389

[8] Doringo M, Birattari M, Stutzle T. Ant colony optimization, artificial ants as a comutational intelligence technique. IEEE Computational Intelligence Magazine. 2006;**1**(4):28-39

[9] Nembhard DA. Heuristic approach for assigning workers to tasks based on individual learning rates. International Journal of Production Research. 2001;**39**(9):1955-1968

[10] McDonald T, Kimberly PE, Eileen MV, Koelling CP. Development and application of a worker assignment model to evaluate a lean manufacturing cell. International Journal of Production Research. 2009;**47**(9):2427-2447

[11] Norman BA, Tharmmaphomphilas W, Needy KL, Bidanda B, Warner RC. Worker assignment in cellular manufacturing considering technical and human skills. International Journal of Production Research. 2002;**40**(6):1479-1492

[12] Ingolfsson A, Campello F, Wu X, Cabral E. Combining integer programming and the randomization method to schedule employees. European Journal of Operational Research. 2010;**202**(1):153-163

[13] Brusco MJ, Johns TR. Staffing a multiskilled workforce with varying levels of productivity: An analysis of cross-training policies. Decision Sciences. 1998;**29**(2):499-515

[14] Mohan S. Scheduling part-time personnel with availability restrictions and preferences to maximize employee satisfaction. Mathematical and Computer Modelling. 2008;**48**(11-12):1806-18013

[15] Du L, Zhang Y, Li H. A competence-driven staff assignment model based on stochastic working status. In: Zhu M, editor. Business Economics and Financial Sciences; Berlin: Springer 2012. pp. 463-470

[16] Gutjahr WJ, Katzensteiner S, Reiter P, Stummer C, Denk M. Competence-driven project portfolio selection, scheduling and staff assignment. Central European Journal of Operations Research. 2008;**16**(3):281-306

[17] Grosse EH, Glock CH, Jaber MY, Neumann WP. Incorporating human factors in order picking planning models: Framework and research opportunities. International Journal of Production Research. 2015;**53**(3):695-717

[18] Crawford B, Soto R, Johnson F, Monfroy E, Paredes F. A max-min ant system algorithm to solve the software project scheduling problem. Expert Systems with Applications. 2014;**41**(15):6634-6645

[19] Mutingi M, Mbohwa C. A fuzzy-based particle swarm optimisation approach for task assignment in home healthcare. South African Journal of Industrial Engineering. 2014;**25**(3):84-95

[20] Olivella J, Corominas A, Pastor R. Task assignment considering cross-training goals and due dates. International Journal of Production Research. 2013;**51**(3):952-962

[21] Senjuti BR, Ioanna L, Saravanan T, Sihem AY, Gautam D. Task assignment optimization in knowledge-intensive crowdsourcing. The VLDB Journal. 2015;**24**(4):467-491

[22] Roblek M, Zajec M, Kern T. The lack of knowledge? Change the way you work. In: Sprague RH, editor. Proceedings of the 44th Annual Hawaii International Conference on System Sciences; 4-7 January; Koloa, Kauai, Hawaii. Los Alamitos: California: IEEE - The Institute of Electrical and Electronics Engineers; 2011. p. 6

[23] Goldratt EM. The Goal: A Process of Ongoing Improvement. Third Edition. NewYork: Routledge; 2016

[24] Sheer AW, Nuttgens M. Business process management: Models techniques and empirical Studies. In: ARIS Architecture and Reference Models to Business Process Management. Berlin: Springer-Verlag; 2000

[25] Valiris G, Glykas M. Business analysis metrics for business process redesign. Business Process Management Journal. 2004;**10**(4):445-480

[26] Anupindi R, Chopra S, Deshmukh SD, Van MIeghem JA, Zemel E. Managing Business Process Flows. New Jersey: Prentice Hall; 1999

[27] Bauer K. KPIs: Not all metrics are created equal. DM Review. 2009;**14**(12):42

[28] Maylett T. 360-Degree feedback Revisited: The transition from development to appraisal. Compensation & Benefits Review. 2009;**41**(5):52-59

[29] Davis R. ARIS Design Platform: Advanced Process Modelling and Administration. London: Springer Verlag; 2008

[30] Lindo Systems Inc. What's Best Software for Microsoft Excel [Internet]. 2007

[31] Kern T, Roblek M, Urh B. Analysis of MORS processes, organization and personnel systemization. Project CRP M5-0048. 2006. Ljubljana

[32] Kern T, Roblek M, Urh B, Kokalj Š. Development of MORS model for a selection of candidates for special tasks execution. Project CRP M5-0171. 2008. Ljubljana

[33] Green PC. Building Robust Competencies: Linking Human Resource Systems to Organizational Strategies. San Francisco: Jossey Bass, Inc. Publisher; 1999

IntechOpen

IntechOpen