Chapter 8

Structural and Functional Roles of FSH and LH as Glycoproteins Regulating Reproduction in Mammalian Species

Michael P. Mullen, Dara J. Cooke and Mark A. Crow

Additional information is available at the end of the chapter

http://dx.doi.org/10.5772/48681

1. Introduction

The gonadotropins, a family of closely related glycoprotein hormones, include follicle stimulating-hormone (FSH) and luteinizing hormone (LH) which are produced by the same pituitary cells, the gonadotrophs and chorionic gonadotropin (CG) which is of placental origin. Thyroid-stimulating hormone (TSH) is a structurally related glycoprotein hormone produced by pituitary thyrotroph cells. Gonadotropin-releasing hormone (GnRH) is a decapeptide secreted from the pre-optic and arcuate nuclei of the hypothalamus into the hypophyseal-portal blood vessels which transports it to the anterior pituitary. At the anterior pituitary GnRH stimulates the secretion of LH and FSH, both of which play a central role in ovarian function. The classical studies in sheep (conducted by the Karsch lab in University of Michigan, Ann Arbor), that involved collection of hypophyseal portal blood [1], have shown that pulsatile secretion of GnRH from the hypothalamus is virtually 100% coincident with pulsatile secretion of LH from the anterior pituitary. However, increases in serum FSH levels do not always coincide with increases in levels of LH [2], implying that there may be other mechanisms modifying FSH secretory patterns. The growth, development and maturation of ovarian follicles are fundamental to effective reproduction in animals. In heifers, there are two to three periods or cycles of dominant follicle development during the estrous cycle [3-5]. The key hormone regulating follicular growth is FSH, while pulsatile LH appears to be involved in regulating normal follicular turnover. Our knowledge of the chemistry of the gonadotropic hormones has greatly increased our understanding of the mechanisms of mammalian reproduction. The structural features and the biological properties of the gonadotropins have been under intense investigation for many years as illustrated in several reviews [6-8]. For example, the nucleotide and the amino acid sequences of the gonadotropins from many species are now known and there is

extensive information regarding the composition and structure of associated carbohydrate moieties [9-12]. Studies using deglycosylated hormones have played a critical role in the elucidation of the functional properties of both carbohydrate and protein components of the hormones. From these studies it has become evident that isoforms of each hormone arise from variations in the carbohydrate moiety present in the hormone, as opposed to varying amino acid sequences. The ability to detect and quantify levels of gonadotropins has been central to their study. The measurement of biological responses in test animals in vivo were the earliest assays used for these hormones. Today, a variety of in vitro bioassays [13-15] and immunoassays [16] are in use. However, a discrepancy exists between bioassays and immunoassays for gonadotropins: i.e. immunologically active hormone may not always be biologically active [16]. Immunogenicity of glycoprotein hormones is, for the most part, dependent on a peptide epitope while the carbohydrate moieties contribute to the overall bioactivity of the hormone [9, 17, 18]. It should follow then, that isoforms of a particular gonadotropin have different bioactivities, due to the variation in carbohydrates found in them.

This book chapter describes the structural features of the gonadotropins, their proposed biosynthetic pathways and the molecular basis for their heterogeneity. It is now widely accepted that the observed heterogeneity is, to a large extent, due to the variation in the carbohydrate component of these molecules. The nature of this carbohydrate has been shown to influence their biopotency. For example, circulatory half-life, receptor binding and ability to stimulate signal transduction have all been shown to be influenced by the oligosaccharides present in the gonadotropins. The influence of various factors, such as age, puberty, pregnancy, estradiol, GnRH and nutrition on heterogeneity patterns in various species is also discussed.

2. Structural features of the gonadotropins

The gonadotropins are glycoprotein hormones consisting of non-covalently associated α- and β-subunits [19, 20]. These heterodimers contain two types of oligosaccharides, N-linked and O-linked. O-linked oligosaccharides are covalently bonded to the hydroxyl oxygen of serine (Ser) or threonine (Thr), while N-linked are covalently bonded to the amide nitrogen of asparagine (Asn) [21]. Both types of oligosaccharide are found in the gonadotropins; however, the N-linked type predominate.

Within a particular species, the α-subunits of all the gonadotropins are identical in amino acid sequence, as a single gene encodes the α-subunit [22, 23]. Target cell specificity arises from the β-subunit [24, 25], which is encoded by a distinct gene. Although the amino acid sequences of the β-subunits of LH, FSH, TSH and CG show some homology, they are not identical. For example, LHβ and CGβ of human origin are approximately 70% homologous, while ovine LHβ and ovine FSHβ are approximately 34% homologous and bovine LHβ and bovine FSHβ are approximately 30% homologous. One exception to this is equine LHβ and equine CGβ, which have identical amino acid sequences [26].

The Asn-linked oligosaccharides of the α and β-subunits of the glycoprotein hormones, of both pituitary and placental origin, consist of a heterogenous array of neutral, sialylated, sulphated and mixed sialylated/sulphated oligosaccharides giving rise to extensive heterogeneity in their molecular forms. Thus, while any one gonadotropin consists of two polypeptide chains, the α and β-subunits, the heterogeneity of the attached carbohydrate gives rise to multiple molecular forms of that particular gonadotropin [11].

3. The *α*-subunit

Within a given species, the amino acid sequence of the α-subunits of the various glycoprotein hormones is identical, arising from a single mRNA. The molecular heterogeneity generated by variations in carbohydrate content gives rise to gonadotropin isoforms of variable bioactivity [27-29]. The amino acid sequences of the α-subunits of human, bovine, ovine, porcine and equine gonadotropins have been published from data obtained either by direct amino acid sequencing or from the nucleotide sequences of their respective cDNAs [23, 24, 30]. The amino acid sequence is highly conserved across species (Fig. 1), for example, bovine and ovine α-subunits are identical, bovine and equine are approximately 82% homologous and bovine and human α-subunits show approximately 75% amino acid sequence homology. The human α-subunit gene has a 12 base pair deletion that is reflected in the mature protein as having four fewer amino acids close to the N-terminus. The positions of the ten cysteine residues in the α-subunits of various species are highly conserved.

```
            5     10    15    20    25    30    35    40    45    50
            ^     ^     ^     ^     ^     ^     ^     ^     ^     ^
Ovine       FPDGEFTMDGCPECKLKENKYFSKPDAPIYQCMGCCFSRAYPTPARSKKT
Bovine      FPDGEFTMDGCPECKLKENKYFSKPDAPIYQCMGCCFSRAYPTPARSKKT
Porcine     FPDGEFTMQGCPECKLKENKYFSKLGAPIYQCMGCCFSRAYPTPARSKKT
Equine      FPDGEFTTQDCPECKLRENKYFFKLGVPIYQCKGCCFSRAYPTPARSRKT
Human       APD----VQDCPECTLQENPFFSQPGAPILQCMGCCFSRAYPTPLRSKKT

            55    60    65    70    75    80    85    90    95
            ^     ^     ^     ^     ^     ^     ^     ^     ^
Ovine       MLVPKNITSEATCCVAKAFTKATVMGNYRVENHTECHCSTCYYHKS
Bovine      MLVPKNITSEATCCVAKAFTKATVMGNYRVENHTECHCSTCYYHKS
Porcine     MLVPKNITSEATCCVAKAFTKATVMGNARVENHTECHCSTCYYHKS
Equine      MLVPKNITSESTCCVAKAFIRVTVMGNIKLENHTQCYCSTCYHHKI
Human       MLVQKNVTSESTCCVAKSYNRVTVMGGFKVENHTACHCSTCYYHKS
```

Figure 1. The amino acid sequences of the mature alpha subunits of gonadotropic hormones from five species [24, 31, 32] using single letter code (A, alanine; B, either asparagine or aspartic acid; C, cysteine; D, aspartic acid; E, glutamic acid; F, phenylalanine; G, glycine; H, histidine; I, isoleucine; K, lysine; L, leucine; M, methionine; N, asparagine; P, proline; Q, glutamine; R, arginine; S, serine; T, threonine; V, valine; W, tryptophan; Y, tyrosine; Z, either glutamine or glutamic acid). Sequences are aligned with their cysteine residues in register. There is evidence for disulphide bonds linking residue 11 with 35 and 14 with 36 but there is still uncertainty concerning the postulated bonds linking residue 30 with 64, 63 with 91 and 86 with 88 [33, 34].

Data from Cornell and Pierce [33] and from Mise and Bahl [34] provide information for the tentative pairings of cysteine residues in disulphide bridges indicated by the solid lines in Fig. 1. As the positions of cysteine residues are so highly conserved across species, this implies that the disulphide bridges found within the α-subunit are identical among α-subunits of different species. This indicates that the folding of the α-subunits of the different species is likely to be identical. This concept is supported by the fact that it is possible to produce a 'hybrid hormone' containing the α-subunit from one species combined with the β-subunit of another, which displays in vitro biological activity. For example, in studies involving hybrids made from the subunits of human CG gonadotropin (hCG) and ovine and porcine LH, Strickland and Puett [35] have shown that the activity of a given hybrid hormone, as measured by its ability to stimulate steroidogenesis in vitro, has the highest correlation with that of the hormone from which the β-subunit is derived. Indeed, some hybrids show increased activity in in vitro bioassays, as shown by Bousfield et al [36]. In this case, the equine LHα-porcine LHβ hybrid hormone was shown to be 49 times as active as porcine LH in stimulating steroidogenesis by Leydig cells.

While the positions of the various cysteine residues are known, there is little agreement between laboratories on the exact cysteine pairings [33, 34, 37-39]. The alignment of disulphide bridges proposed by Cornell and Pierce [33] for bovine LHα and by Mise and Bahl [34] for human CGα are in exact agreement. Owing to the clustering of cysteine residues in the α-subunit (two groups of two, and two groups of three), definitive identification of disulphide bridges has proven difficult. The positions of the carbohydrate residues on the α-subunits from various species are indicated in Fig. 2. The subunits have been aligned by their cysteine residues as these are so highly conserved. This allows for easy comparison of the homologous regions of the hormones. Hence, the glycosylation sites in the human α-subunit match those in all other α-subunits, even though it contains four fewer amino acids near the N-terminus. Asn-linked glycosylation occurs co-translationally [40, 41] when Asn is encountered in the sequence Asn-X-Ser/Thr, where X is any amino acid, except proline, and the amino acid at the third position is either Ser or Thr. In sharp contrast to their amino acid sequences, the Asn-linked oligosaccharides on the various α-subunits within a species can and do differ significantly. Thus, it is the nature of the carbohydrate residues that distinguish the α-subunits of the various gonadotropins within a species. The α-subunits are found in two forms within the pituitary gland and placenta. These are (i) αβ-dimer-associated α-subunits, and (ii) free α-subunits not combined with a β-subunit (free α). Free α-subunit has been shown to contain one O-linked oligosaccharide at position Thr^{43} [42, 43] which is not present in the α-subunit of αβ-dimers. Hence, the uncombined α-subunit has a higher molecular weight than the α-subunit found in association with β-subunit [44, 45]. Parsons and Pierce [46] have shown that α-subunits with an O-linked oligosaccharide will not combine with β-subunits to form αβ-dimers.

This is in contrast to the α-subunits lacking O-linked oligosaccharides which readily combine with β-subunits forming dimeric structures. Post translational modification of the

gonadotropins occurs in the endoplasmic reticulum (ER) and subsequently, further modification occurs in the Golgi apparatus (GA) [21, 40, 41]. As αβ-dimerisation occurs in the ER [47, 48] and O-linked glycosylation is thought to occur in the GA, dimerisation may block a potential O-glycosylation site.

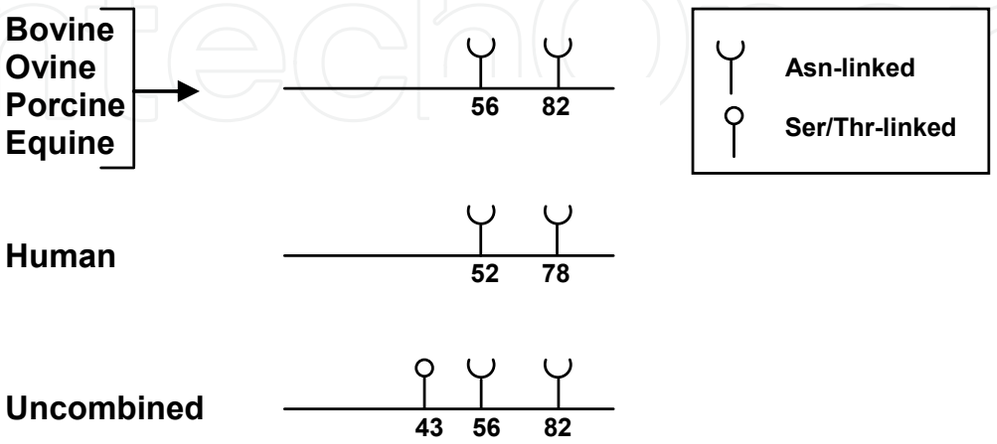

Figure 2. Glycosylation sites on the alpha and uncombined alpha subunits of the gonadotropic hormones [17, 24, 49]. Amino acid sequences are represented by solid horizontal lines. Proteins are aligned with their cysteine residues in register. Numbers indicate the positions of the glycosylated amino acids. For convenience, numbering is based on ovine LH.

4. The β-subunit

As the β-subunit determines the biological specificity of the gonadotropins [24], it is often referred to as the hormone specific subunit. The amino acid sequences of the β-subunits of various gonadotropins from several species are compared in Fig. 3. The β-subunits of LH, FSH, TSH and CG are proteins of varying lengths, ranging from 111 amino acids in bovine FSHβ (one of the shortest), to 149 amino acids in equine CGβ and equine LHβ (the longest). Human and equine CG have additional amino acids at the C-terminal [50, 51], compared with the other hormones (Fig. 3). This C-terminal extension peptide was originally thought to be a characteristic of CG and not of pituitary-derived glycoprotein hormones. However, it was subsequently discovered that equine LH also has a C-terminal extension peptide [52]. No other pituitary derived gonadotropin from any other species has this extension peptide.

The C-terminal extension peptide is heavily glycosylated containing four O-linked oligosaccharides in the case of human CG and five or six in the case of equine CG and equine LH (Fig. 4). Unfortunately, there is no recognised consensus sequence to signal O-linked glycosylation, in contrast to the Asn-X-Ser/Thr sequence which is required for N-linked glycosylation.

It is possible that a single gene may code for both the equine CGβ and equine LHβ subunits, as these have identical amino acid sequences (Fig. 3). Separate genes encode the separate β-subunits of the various gonadotropins in all other animal species and these genes are located on different chromosomes with one exception, the human LH/CG β-subunit gene cluster which is found on chromosome 19 [53]. This cluster consists of a single copy of the human LHβ gene and six copies of the human CGβ gene; however, some of these are not transcribed. In contrast to equine LHβ and equine CGβ, analysis of the amino acid sequences of human LHβ and human CGβ shows these to have different amino acid sequences.

```
          5    10   15   20   25   30   35   40   45   50      55   60   65   70   75
          ^    ^    ^    ^    ^    ^    ^    ^    ^    ^       ^    ^    ^    ^    ^
hCG   SKEPLRPRCRPINATLAVEKEGCPVCITVNTTICAGYCPTMTRVLQGVLPALP--QVVCNYRDVRFESIRLPGCPRG
eCG   SRGPLRPLCRPINATLAAEKEACPICITFTTSICAGYCPSMVRVMPAALPAIP--QPVCTYRELRFASIRLPGCPPG
eLH   SRGPLRPLCRPINATLAAEKEACPICITFTTSICAGYCPSMVRVMPAALPAIP--QPVCTYRELRFASIRLPGCPPG
hLH   SREPLRPWCHPINAILAVEKEGCPVCITVNTTICAGYCPTMMRVLQAVLPPLP--QVVCTYRDVRFESIRLPGCPRG
oLH   SRGPLRPLCQPINATLAAEKEACPVCITFTTSICAGYCPSMKRVLPVILPPMP--QRVCTYHELRFASVRLPGCPPG
bLH   SRGPLRPLCQPINATLAAEKEACPVCITFTTSICAGYCPSMKRVLPVILPPMP--QRVCTYHELRFASVRLPGCPPG
pLH   SRGPLRPLCRPINATLAAENEACPVCITFTTSICAGYCPSMRRVLPAALPPVP--QPVCTYRELSFASIRLPGCPPG
eFSH  ------NSCELTNITIAVEKEGCGFCITINTTWCAGYCYTRDLVYK--DPARPNIQKTCTFKELVYETVKVPGCAHH
hFSH  ------NSCELTNITIAIEKEECRFCISINTTWCAGYCYTRDLVYK--DPARPKIQKTCTFKELVYETVRVPGCAHH
oFSH  ------RSCELTNITITVEKEECSFCISINTTWCAGYCYTRDLVYK--DPARPNIQKACTFKELVYETVKVPGCAHH
bFSH  ------RSCELTNITITVEKEECGFCISINTTWCAGYCYTRDLVYR--DPARPNIQKTCTFKELVYETVKVPGCAHH
pFSH  ------NSCELTNITITVEKEECNFCISINTTWCAGYCYTRDLVYK--DPARPNIQKTCTFKELVYETVKVPGCAHH
hTSH  -------FCIPTEYTMHIERRECAYCLTINTTICAGYCMTRDINGKLFLPKYALSQDVCTYRDFIYRTVEIPGCPLH
bTSH  -------FCIPTEYMMHVERKECAYCLTINTTVCAGYCMTRDVNGKLFLPKYALSQDVCTYRDFMYKTAEIPGCPRH
pTSH  -------FCIPTEYMMHVERKECAYCLTINTTICAGYCMTRDFNGKLFLPKYALSQDVCTYRDFMYKTVEIPGCPHH

          80   85   90   95   100  105  110  115  120  125  130  135  140  145
          ^    ^    ^    ^    ^    ^    ^    ^    ^    ^    ^    ^    ^    ^
eCG   VDPMVSFPVALSCHCGPCQIKTTDCGVFRDQPLACAPQASSSSKDPPSQPLTSTSTPTPGASRRSSHPLPIKTS
hCG   VNPVVSYAVALSCQCALCRRSTTDCGGPKDHPLTCDDPRFQDSSSSKAPPPSLPSPSRLPGPSDTPILPQ
eLH   VDPMVSFPVALSCHCGPCQIKTTDCGVFRDQPLACAPQASSSSKDPPSQPLTSTSTPTPGASRRSSHPLPIKTS
hLH   VDPVVSFPVALSCRCGPCRRSTSDCGGPKDHPLTCDHPQLSGLLFL
oLH   VDPMVSFPVALSCHCGPCRLSSTDCGPGRTQPLACDHPPLPDIL
bLH   VDPMVSFPVALSCHCGPCRLSSTDCGGPRTQPLACDHPPLPDILFL
pLH   VDPTVSFPVALSCHCGPCRLSSSDCGGPRAQPLACDRPLLPGLLFL
eFSH  ADSLYTYPVATACHCGKCNSDSTDCTVRGLGPSYCSFGDMKE
hFSH  ADSLYTYPVATQCHCGKCDSDSTDCTVRGLGPSYCSFGEMKE
oFSH  ADSLYTYPVATECHCGKCDRDSTDCTVRGLGPSYCSFSDIRE
bFSH  ADSLYTYPVATECHCSKCDSDSTDCTVRGLGPSYCSFREIKE
pFSH  ADSLYTYPVATECHCGKCDSDSTDCTVRGLGPSYCSFSENKE
hTSH  VAPYFSYPVALSCKCGKCNTDYSDCIHEAIKTNYCTKPQKSYLVGFSV
bTSH  VTPYFSYPVAISCKCGKCNTDYSDCIHEAIKTNYCTKPQKSYMVGFSI
pTSH  VTPYFSYPVAISCKCGKCNTDYSDCIHEAIKTNYCTKPQKSYVLEFSI
```

Figure 3. Compilation of the reported amino acid sequences of the glycoprotein hormone beta subunits [49]. Original references are cited in several reviews [24, 31, 32]. For single letter code, see legend to Fig. 1.

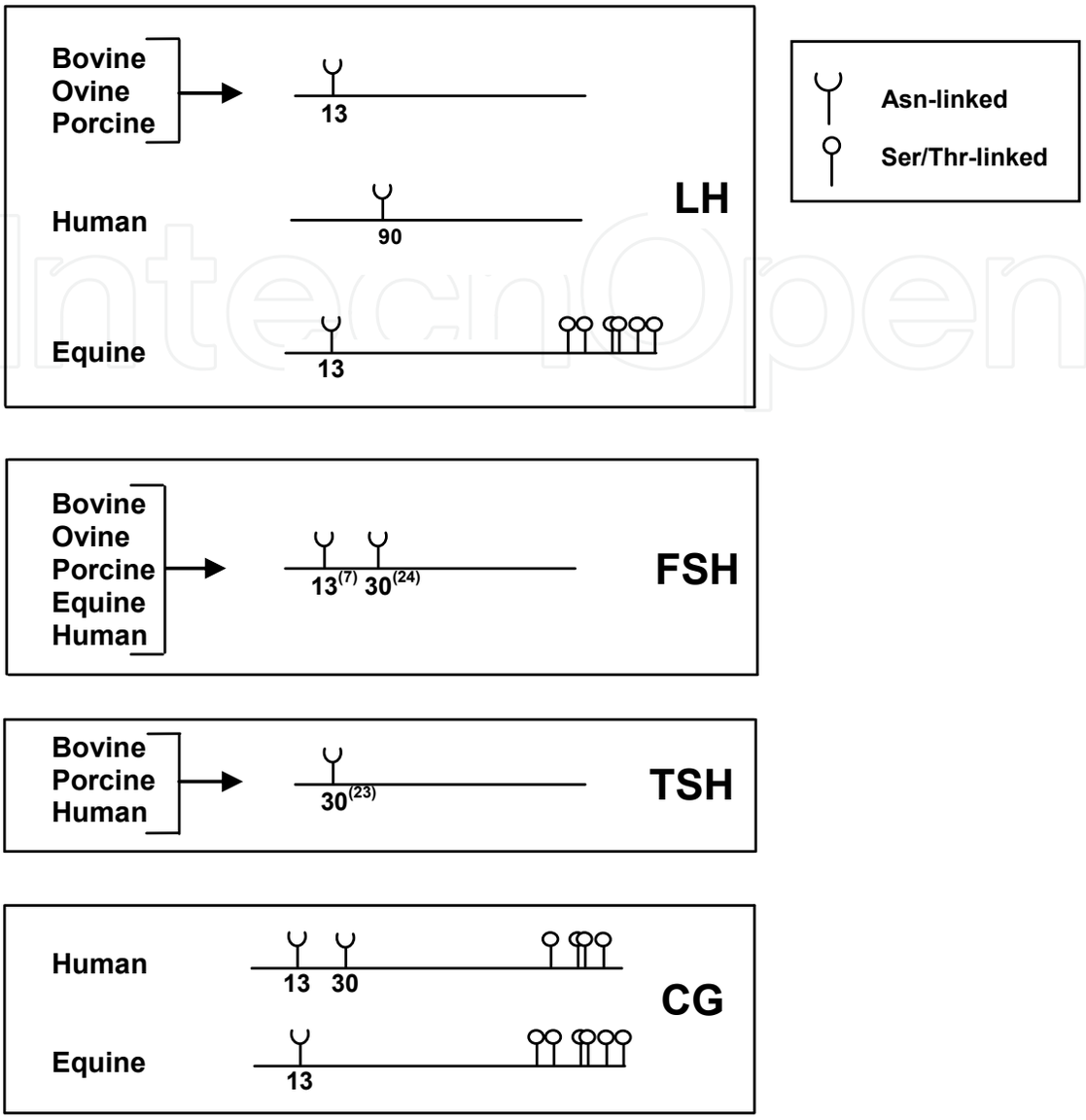

Figure 4. Glycosylation patterns on the beta subunits of the gonadotropic hormones. Proteins are aligned with their cysteine residues in register [49]. Numbers indicate the positions of the glycosylated amino acids and numbering is based on ovine LH. Where actual numbers differ, the positions of the glycosylated amino acids are indicated by the numbers in parentheses.

As in the α-subunit, cysteine residues are located in highly conserved positions in all the β-subunits of all species with one exception, i.e. one cysteine residue from a salmon gonadotropic hormone, (sGTHbl), is not present [26]. Again, as with the α-subunit, alignment of the β-subunit sequences by placing their half cystines in register, allows comparisons of highly conserved regions, although some subunits are shorter at the N-terminus than others. For example, the β-subunits of FSH and TSH from all species are shorter by six and seven amino acid residues, respectively, than the β-subunits of LH. The degree of amino acid sequence homology between β -subunits from different species varies. For example, ovine and bovine LHβ are approximately 96% homologous while equine and human CGβ display an homology of approximately 50%.

Each β-subunit contains 12 cysteine residues making up six intra-disulphide bonds. These 12 cysteine residues are more evenly scattered through the molecule than those found in the α-subunit. Two groups of researchers, using different methodologies, have indicated identical disulphide bridge placements for ovine LHβ and human CGβ [34, 54]. However, agreement exists on only three of six disulphide bridges among all authors. As such, some uncertainty remains as to the exact cysteine pairings in the β-subunit, but this situation is less controversial than that in the case of the α-subunits. As with the α-subunits, the positioning of the cysteine residues among all β-subunits is likely to lead to similar disulphide bridge formation and therefore very similar, or identical, overall three-dimensional structures.

5. Structural features of the Asn-linked carbohydrates

The α- and β-subunits of the gonadotropins contain either one or two Asn-linked oligosaccharides. The positions of the oligosaccharides on the β-subunits of the gonadotropins are indicated in Fig. 4. The position and structure of the Asn-linked carbohydrates found on gonadotropin subunits are varied [17, 24, 55] and consist of four types: (i) neutral, (ii) sialylated, (iii) sulphated and (iv) mixed sialylated/sulphated types. Oligosaccharides differ not only in their degree of sialylation or sulphation, but also in their core structures; these differences are the basis for the microheterogeneous molecular populations of individual hormones with varying biological activities [27, 29, 56-60]. Green and Baenziger [9, 11] have elucidated the structures and distributions of the sulphated (S) and sialylated (N) oligosaccharides on bovine, ovine and human pituitary glycoprotein hormones. The sulphated, sialylated and sulphated/sialylated structures were found to be highly heterogeneous and comprised 67-90% of the N-linked carbohydrate moieties present in pituitary-derived gonadotropins. As the hormone samples used in these studies were pituitary-derived, it should be borne in mind that some of the structures may represent partially synthesised/degraded oligosaccharides and may not correspond to secreted forms of the hormones. Nonetheless, these studies have provided a molecular basis for the observed heterogeneity of the gonadotropins. The oligosaccharides found in the placental gonadotropin, human CG, consist of typical neutral and sialylated di-branched structures [61-63] found in many serum glycoproteins. However, those found in pituitary-derived gonadotropins are more heterogeneous and complex in nature, perhaps reflecting partially processed forms of the molecules.

6. Sulphated oligosaccharides in the pituitary glycoprotein hormones

The oligosaccharide chains of glycoprotein hormones are of the complex type, as opposed to the mannose-rich type. The sulphated carbohydrates on bovine LH were among the first of the pituitary-derived gonadotropins to be fully characterized [55, 64]. The structures of the sulphated oligosaccharides found in the pituitary gonadotropins are illustrated in Fig. 5. These oligosaccharides vary in both the number of sulphate moieties and in the composition of the oligosaccharide structures (Fig. 5).

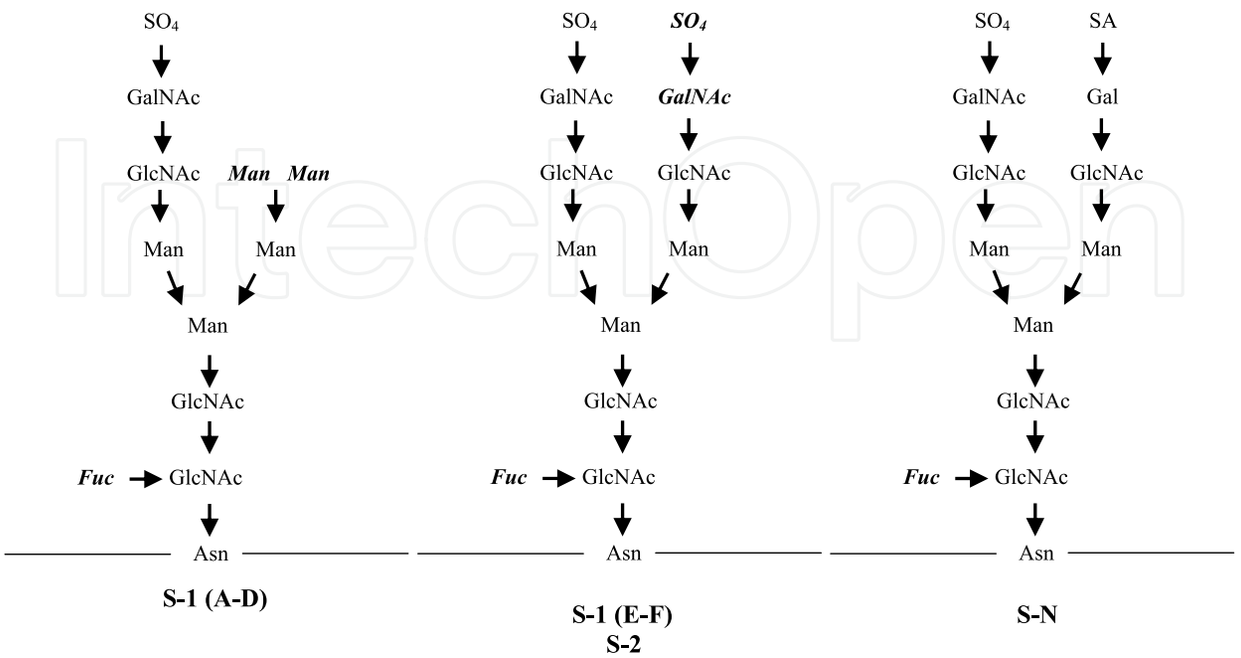

Figure 5. Structures of the sulphated N-linked oligosaccharides found in the pituitary-derived gonadotropins [11, 49]. Residues in bold italics are variably present. Both fucosylated and non-fucosylated forms of oligosaccharide are found in the pituitary hormones.

Each of the sulphated oligosaccharides has a core region consisting of three mannose and two N-acetylglucosamine (GlcNAc) residues [9, 55]. Additionally, each of the sulphated structures has one similar peripheral branch consisting of the sequence SO_4-N-acetylgalactosamine-N-acetylglucosamine-manose (SO_4-GalNAc-GlcNAc-Man). The second peripheral branch always commences with a mannose residue bonded to the core mannose. Sulphated oligosaccharides are either mono-(S-1) or di-(S-2) sulphated. The sulphated/sialylated (S-N) structure contains both sulphate and sialic acid residues. Sulphate is always found associated with GalNAc while sialic acid is always linked to a galactose residue. The relative amounts of sulphated oligosaccharides varies considerably among the different hormones [64]. For example, the bovine hormones were found to contain very little S-N (0-2% of total oligosaccharides), while human and ovine hormones have relatively large amounts of S-N (10% of ovine FSH and 23% of human LH oligosaccharides are of the S-N type). However, bovine, ovine and human pituitary glycoprotein hormones display a very similar spectrum of sulphated oligosaccharides, i.e. most of the sulphated structures shown in Fig. 5 were isolated from each of the species' pituitary gonadotropins. In terms of the relative biosynthetic and secretory pathways, the presence of significant amounts of S-N on some of the hormones is important. It demonstrates that hormones which receive SO_4 and GalNAc do not traverse a physically distinct pathway to those hormones which receive sialic acid and galactose.

7. Sialylated oligosaccharides in the pituitary glycoprotein hormones

In general, the terminal carbohydrate residue of gonadotropin oligosaccharides is either sulphated or sialylated [17]. Some hormones, for example bFSH and hFSH, contain a much greater proportion of sialic acid and galactose than sulphate and GalNAc [10, 65, 66]. The sialylated oligosaccharides found on the gonadotropins, like the sulphated ones, consist of a heterogeneous array of structures. Three major types of sialylated oligosaccharide exist. These are mono-, di- and tri-sialylated oligosaccharides, containing one (N-1), two (N-2) and three (N-3) sialic acid residues, respectively. These oligosaccharides include both di- and tri-branched structures. The structures of the sialylated di- and tri-branched Asn-linked oligosaccharides found in pituitary gonadotropins are shown in Fig. 6. Additional details of all proposed structures for both sulphated and sialylated oligosaccharides are provided by Green and Baenziger [11].

The spectrum of sialylated structures found among the different hormones varies widely, in sharp contrast to the spectrum of sulphated oligosaccharides associated with each hormone. The relative amounts of particular sialylated structures also varies significantly among the various hormones. Some oligosaccharides are found exclusively associated with one particular hormone from one species. For example, N-3(D) (Fig. 6) and an N-2 form of this oligosaccharide are found exclusively on bovine FSH [12]. Hence, these oligosaccharides are both hormone and species specific. Human TSH was shown to have oligosaccharides bearing exclusively sialic acid residues while bovine TSH does not. Bovine TSH does have small amounts of S-N. Of all the bovine, ovine and human pituitary gonadotropins, only human LH and human FSH contained sialylated oligosaccharides bearing a β1,4 linked 'bisecting' GlcNAc residue attached to the core mannose (Fig. 6, N-2(C)). This implies that the enzyme responsible for the addition of GlcNAc in this position is active only in human and not in bovine or ovine gonadotroph cells.

Follicle-stimulating hormone contains sialylated oligosaccharides which are different to those found on LH or TSH. The most striking difference is the presence of tri-sialylated, N-3 type, oligosaccharides on FSH but not on LH or TSH [12]. This is true for ovine, bovine and human. Hence the study of sialylated oligosaccharide structures has highlighted several examples of both hormone and animal species-specific differences.

The distributions of the various oligosaccharide types in the pituitary glycoprotein hormones are illustrated in Table 1.

It is interesting to note the distribution of sulphated and sialylated structures. Bovine LH bears exclusively sulphated oligosaccharides while, in bovine FSH, the sialylated type predominates. Similarly, ovine LH contains very few sialylated structures while ovine FSH contains roughly equal amounts of sulphated and sialylated oligosaccharides. This raises the question of how different glycosylation patterns occur on LH and FSH, as both are produced by the same pituitary cell, the gonadotroph, and both have α-subunits with identical amino acid sequences. Thus the difference in glycosylation pattern may reflect the presence of the hormone specific β-subunits. Knowing the structural features and the distributions of the various types of oligosaccharide found on the gonadotropins, what are the functions of the various oligosaccharides and what effect, if any, do these carbohydrates have on biological activity?

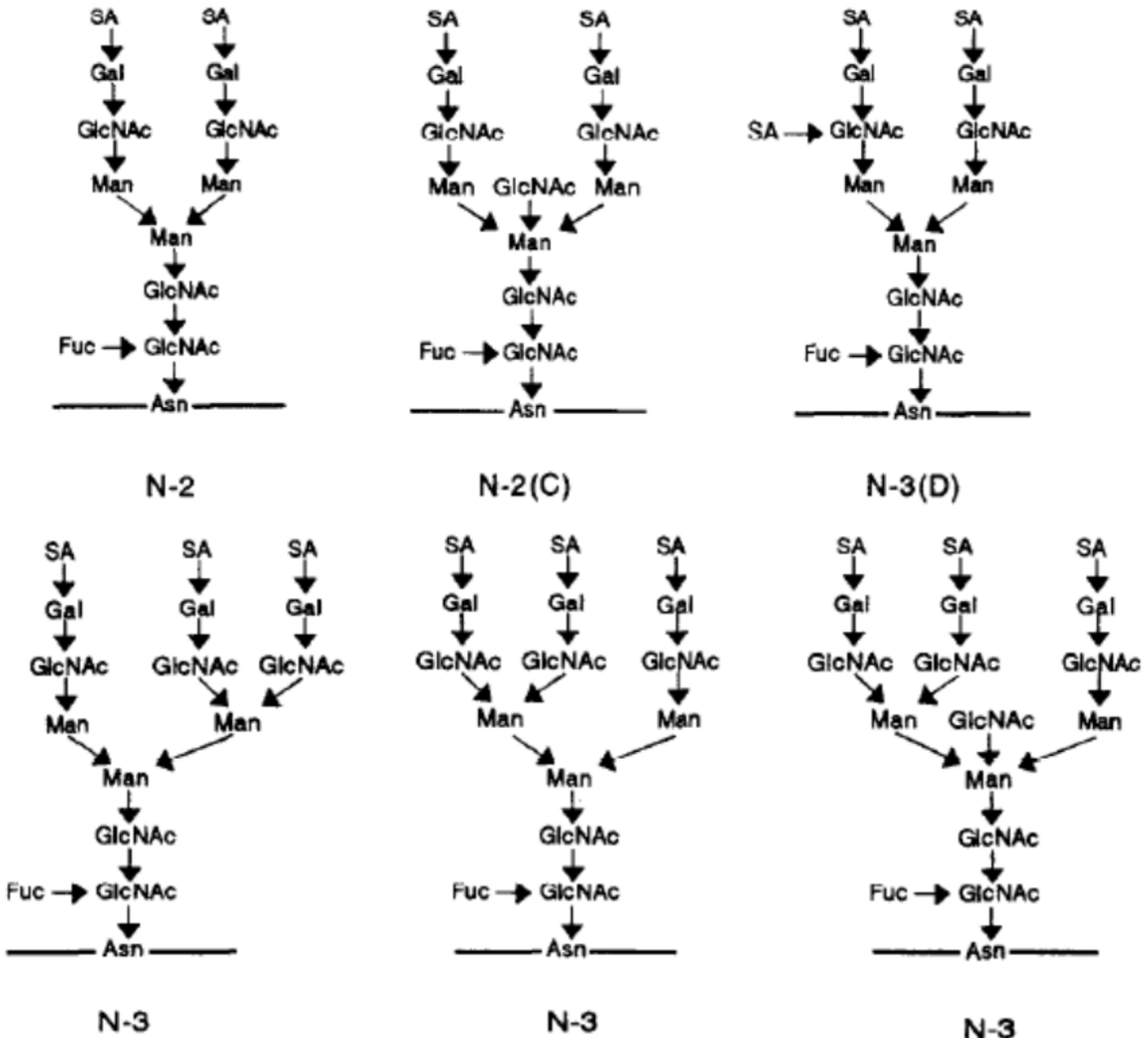

Figure 6. Structures of the sialylated dibranched and tribranched Asn-linked oligosaccharides in the pituitary glycoprotein hormones [49]. Only the highly sialylated structures are shown; see Green and Baenziger [11] for additional structures.

Gonadotrophin	Glycosylation type						
	Neutral	S-1	S-2	S-N	N-1	N-2	N-3
bLH	33	45	22	0	0	0	0
bFSH	32	11	1	1	5	39	11
bTSH	18	32	48	2	0	0	0
oLH	26	56	13	4	1	0	0
oFSH	32	14	16	10	10	11	7
hLH	16	19	7	23	19	16	0
hFSH	10	2	0	5	19	39	25
hTSH	18	25	18	21	5	12	0

Table 1. Relative distributions of neutral, sulphated, sialylated and sulphated / sialylated oligosaccharides expressed as a percentage of total oligosaccharides found in the pituitary glycoprotein hormones [12, 49].

8. Functions of the oligosaccharide residues of the gonadotropins

The overall in vivo activity of the gonadotropins is dependent upon several distinct characteristics: (i) their clearance rate from circulation, (ii) their ability to recognise the correct target cell receptor and (iii) their ability to induce cell signal transduction pathways.

The clearance rate of certain gonadotropins, for example FSH, is directly affected by the presence or absence of sialic acid. Removal of sialic acid by neuraminidase treatment decreases the in vivo biological activity of FSH due to its rapid elimination from the circulation by the hepatic asialoglycoprotein receptor [67, 68]. However, the in vitro biological response is not diminished [69, 70]. Aggarwal and Papkoff [71] examined the relationship of sialic acid residues to in vitro biological activities of the equine gonadotropins. In this study it was found that the in vitro LH activity of desialylated equine CG and equine LH was five and two times greater, respectively, than that of native hormone, as measured by the ability to stimulate steroidogenesis in rat Leydig cells. In contrast to this, Aggarwal and Papkoff [71] also showed that desialylating equine CG and equine FSH drastically reduced the ability of these hormones to stimulate CAMP production (FSH activity). So in the case of equine FSH at least, sialic acid appears to play an important role in in vitro biological activity. In agreement with Aggarwal and Papkoff, a study by West et al. [72] examined the effects of neuraminidase treated ovine pituitary FSH (reducing its acidity) in prepubertal lambs and observed an increased clearance rate and reduced ability to facilitate follicle development and maturation compared with more acidic FSH. However, most data support the hypothesis that sialic acid is present to prevent rapid clearance from circulation, and it is not essential for receptor binding or for signal transduction.

When gonadotropins are totally deglycosylated, either by chemical or enzymic means, their receptor binding ability is not diminished [73] in fact in some cases, it is increased compared with native hormone. For example, Calvo et al. [74] demonstrated a three-fold increase in the ability of deglycosylated human FSH to bind to FSH receptors of bovine testes, when compared with native hormone. Berman et al. [75] showed that the relative binding affinity of deglycosylated human TSH (while not a gonadotropin, is a structurally very similar glycoprotein hormone) was six-fold higher than that of native TSH. However, deglycosylated gonadotropins have a greatly diminished capacity for the stimulation of cAMP production by target cells [76, 77]. Hence, a deglycosylated hormone may bind to its receptor but fail to stimulate a biological response.

In apparent contrast to these findings, Cole et al. [78] has reported that significant steroidogenic activity of LH is maintained after enzymatic removal of oligosaccharides. Retention of some steroidogenic activity in the absence of CAMP production raises the possibility that deglycosylated hormones may act through alternative signal transducing systems and/or second messengers.

Deglycosylated hormones become antagonists of the native hormone in in vitro bioassays [51, 79, 80]. However, some deglycosylated hormones show poor in vivo antagonism. For example, Liu et al. [81] have shown that deglycosylated human CG is a full agonist at the

LH/CG receptor in the primate in vivo despite being a near-complete antagonist of human CG in vitro. Similarly, Patton et al. [82] showed that neither deglycosylated human CG, nor deglycosylated α-intact β-human CG, succeeded in terminating luteal cell function when administered to healthy young women during the mid-luteal phase of their menstrual cycles. This demonstrates that neither of these CG preparations exhibit antagonistic properties. In this study, it was suggested that the failure to interfere with LH maintenance of postovulatory corpora lutea is a result of residual agonist activity of the deglycosylated human CG. Experiments carried out by deglycosylating α- or β-subunits and then recombining the deglycosylated subunits with their native counterparts, support the premise that it is the oligosaccharides of the α-subunit, and not those of the β-subunit, which are essential for producing a biological response [73, 80, 83]. As stated earlier, uncombined α-subunit, which has been isolated from bovine pituitary is O-glycosylated. It is possible that such O-linked oligosaccharides may play a role in regulating dimerisation of pituitary gonadotropins [19]. Begeot et al. [84] demonstrated that uncombined α-subunit induces the development of lactotropes in the pituitary of 13-day-old rat foetuses, indicating that uncombined α-subunit may have a functional role other than that of a gonadotropin subunit. An additional role for uncombined α-subunit has been reported by Blithe et al. [85]. Using free α molecules isolated from the urine of pregnant women, as well as purified reference preparations of human CG α-subunit, Blithe et al. [85] have reported that free α-molecules stimulate the release of prolactin from human decidual cells in culture.

Hence this report suggests a novel role for free α in the paracrine regulation of decidual prolactin secretion.

The gonadotroph cells of the pituitary have the ability to segregate LH and FSH into separate secretory granules. Baenziger and Green [86] have suggested that the oligosaccharides present on LH and FSH may act as 'recognition-markers' to allow the cells to carry out this function. The presence of predominantly sialic acid residues on FSH and sulphate residues on LH may result in the targeting of these hormones to separate secretory granules.

9. Biosynthesis of gonadotropins bearing Asn-linked oligosaccharides

Biosynthesis of glycoprotein hormones involves protein biosynthesis and both co and post-translational modification by the addition of carbohydrate groups. The α- and β-subunits of the gonadotropins are synthesised by translation of their respective mRNAs. The transcription of α- and β-subunit genes is influenced by a number of factors including steroid hormones such as progesterone, estradiol and testosterone. The regulation of transcription of the gonadotropin subunit genes has been reviewed in several papers [87, 88].

Once mRNA has been produced, protein synthesis occurs on polysomes bound to the rough endoplasmic reticulum (RER). If gonadotropin subunit mRNA is subjected to translation using a cell-free translation system (i.e. ribosomes, mRNA etc., but no Golgi membrane-

bound processing enzymes), then the resultant gonadotropin subunits are of slightly higher molecular weight as the signal peptide is not removed [89-91]. Glycosylation does not occur as the enzymes and oligosaccharides required for glycosylation are not present, while the increased molecular weight of the subunit is due to the presence of an N-terminal signal peptide. In vivo, this signal sequence is cleaved from the nascent polypeptide, by a signal peptidase located on the luminal surface of the RER membrane, hence it is not present on mature secreted protein. Elements of the signal hypothesis are reviewed by Jackson and Blobel [92]. Immature gonadotropin subunits containing a signal sequence are termed pre-α and pre-β subunits. Processing of pre-α and pre-β subunits to their mature forms involves two events, i.e. the cleavage of the signal peptide and glycosylation. Signal peptide cleavage occurs co-translationally [92] while glycosylation occurs both co- and post-translationally [24, 93].

Baenziger and Green [86] have proposed the synthetic pathway, outlined in Fig. 7, for the synthesis of the sulphated and sialylated Asn-linked oligosaccharides of the pituitary glycoprotein hormones. This proposed pathway was based upon the established pathway for N-linked glycosylation [41] and the structures of the oligosaccharides found in pituitary glycoprotein hormones isolated from pituitary tissue [11].

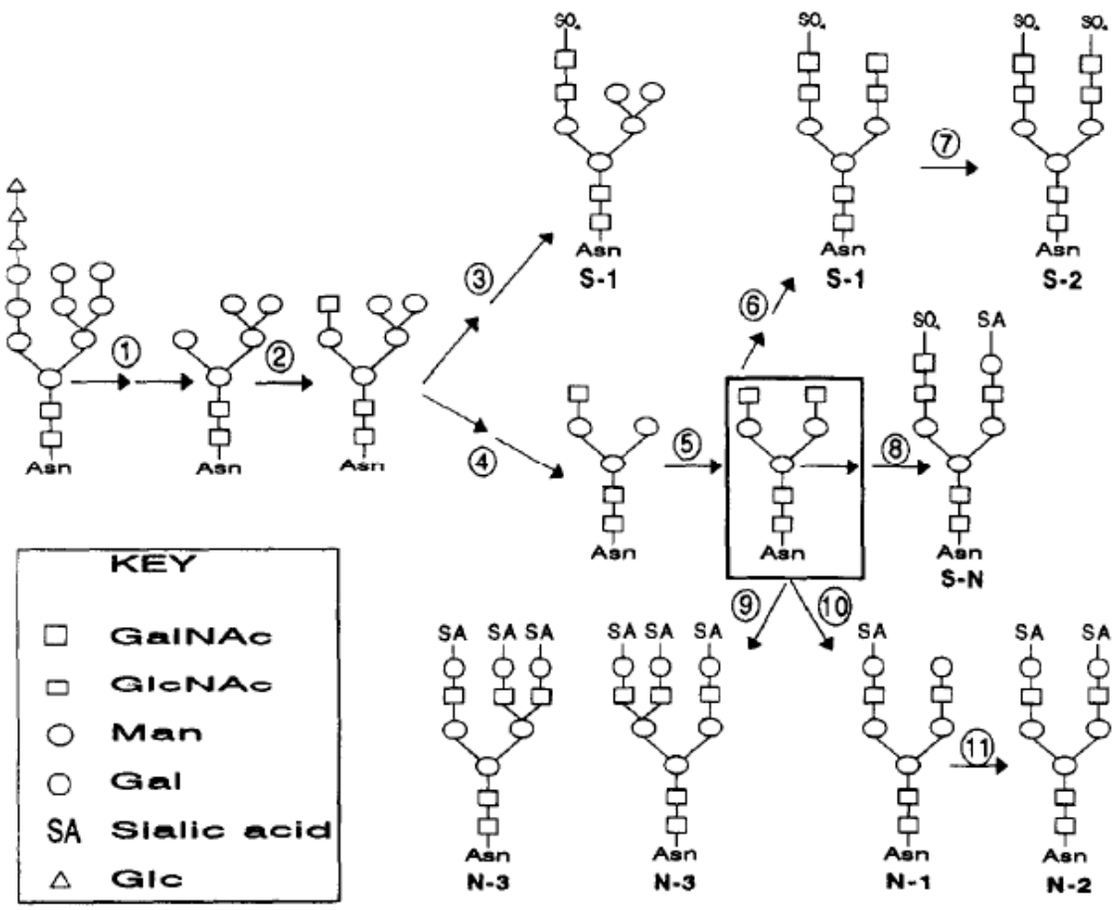

Figure 7. Proposed pathway for the biosynthesis of the sulphated and sialylated oligosaccharides in the pituitary glycoprotein hormones [49, 86].

The primary event in the process of N-linked glycosylation is the transfer of an oligosaccharide core of GlcManGlcNAc from a dolichol phosphate donor to specific Asn residues of the nascent polypeptide chain. As stated earlier, Asn must be in the sequence Asn-X-Ser/Thr in order to become glycosylated. This transfer process occurs co-translationally and is mediated by the enzyme oligosaccharyl transferase. While the glycoprotein is still in the RER, the three peripheral glucose residues are cleaved (step 1; Fig. 7). Specifically, α-glucosidase I removes the terminal glucose and α-glucosidase II cleaves the remaining two glucose residues. Different numbers of mannose residues, 0, 1, or 3 may be removed in the RER by specific glycosidases [94]. Formation of disulphide bonds and $\alpha\beta$-dimerisation [47, 48] is also initiated in the RER. The $\alpha\beta$-dimeric precursor of the mature glycoprotein is packaged into transfer vesicles and transferred from the RER to the cis-Golgi. The cis-Golgi is one of three compartmentalised areas of the organelle known as the Golgi apparatus. It is in the Golgi that vital post-translational modification events take place which play a pivotal role in determining the type of oligosaccharides which will be present in the mature glycoprotein. Hence, post-translational events in the Golgi determine, to some extent, the biological properties of the mature hormone.

In the cis-Golgi, α-1,2-mannosidase may cleave additional mannose residues yielding the ManGlcNAc intermediate (step 1; Fig. 7). This intermediate serves as substrate for the addition of GlcNAc by GlcNAc transferase I in the medial-Golgi, (step 2; Fig. 7). The resulting intermediate, GlcNAcManGlcNAc, may be converted to mono sulphated hybrid oligosaccharides (S-l(A-D)) by the sequential addition of GalNAc and sulphate (step 3; Fig. 7). Alternatively, sequential action of Golgi α-mannosidase II, which removes two mannose residues (step 4; Fig. 7) and GlcNAc transferase II which adds GlcNAc (step 5; Fig. 7) yields an intermediate from which all the remaining gonadotropin-associated Asn-linked oligosaccharides can be synthesised. This key intermediate is the GlcNAcManGlcNAc structure highlighted in Fig. 7 by a bold rectangle.

Hence this key intermediate can act as a template for the production of either sulphated, sialylated or sulphated/sialylated oligosaccharides. If galactose and sialic acid are sequentially added to this key intermediate, then sialylated oligosaccharides are formed (steps 9, 10, 11; Fig. 7). Alternatively, sequential addition of GalNAc and sulphate produces sulphated oligosaccharides (steps 6, 7; Fig. 7). Step 8 (Fig. 7) illustrates how the S-N type carbohydrates are formed, i.e. by the addition of GalNAc and sulphate as well as galactose and sialic acid.

Having discussed the nature of gonadotropin heterogeneity and the biosynthetic pathways by which such a heterogeneous population of hormones may be produced, several questions remain to be answered. For example, of all the isoforms which have been isolated and purified from pituitary extracts, which of these correspond to forms which are actually secreted into the blood and reach their target tissue? There is no doubt that the pituitary gonadotropins exist as multiple isoforms within the blood and that the isoform profile of a particular hormone in the blood does change under different physiological conditions. However, it still remains unclear what effect, if any, such a change in isoform profile has on

the regulation of gonadal function. The following section deals with the factors influencing isoform profiles and suggests how the above questions may be addressed.

10. Factors influencing gonadotropin isoform profile

It is now clear that the gonadotropic hormones are secreted as multiple forms into the blood; however, to date little work has been done to characterize the patterns of gonadotropin isoforms in circulation of farm animals during different physiological states. Much of the data generated to date is based on the patterns of isoforms present in the anterior pituitary rather than in circulation or using rat sertoli or granulosa cell bioassay culture systems to determine biological activity. Thus, further work is required to address the role of gonadotropin heterogeneity in ovarian function and to resolve some of the apparent incoherencies present in the literature.

In prepubertal lambs, there is a high proportion of the more acidic (typically less biopotent) forms of FSH in serum; once lambs reach puberty, there is a shift towards the less acidic (typically more bioactive) forms of FSH in serum [95]. This is consistent with data from rats where an increase in bioactive forms of FSH within the pituitary was observed during the transition through puberty [96, 97]. However, in heifers Stumpf et al. [29] failed to detect a change in the distribution of either LH or FSH isoforms in pituitaries collected during sexual maturation.

During the estrous cycle of ewes, there was little change in the pattern of LH isoforms in the pituitary between the luteal and follicular phases [98]. However, during aestrus there was a decrease in the proportion of basic forms of oLH and a marginal increase in the acidic forms of LH [98]. This is in contrast to data on FSH. In rats, there is an increase in the less acidic (more bioactive in terms of radioreceptor assay) forms of FSH in the anterior pituitary during the pro-estrous period [99] when high concentrations of estradiol are present. Similarly in humans, there is an increase in FSH bioactivity (and the less acidic forms of FSH) during the late follicular phase of the menstrual cycle [28] thought to be associated with the pro-estrus rise in estradiol. Anobile et al. [100] also observed an association between increased estradiol and basic FSH isoforms during the menstrual cycle and concluded that changes in gonadotropin isoforms through the human menstrual cycle are related to changes in the prevailing steroid environment. In contrast, Kojima et al. [101] reported no change in FSH isoform distribution in the pituitary during the follicular phase of the estrous cycle in heifers. In agreement with this, Cooke et al. [102] also reported no changes in circulatory FSH isoforms during the first or second follicular waves in beef heifers, however, did identify greater amounts of less acidic FSH isoforms during the preovulatory gonadotropin surge which was also associated with increased estradiol concentrations. In addition, Crowe et al. [103] examined the resumption of follicular waves post partum and identified no significant differences in FSH heterogeneity between late pregnancy and the early post partum period.

Interestingly, a study by Timossi et al. [104] revealed the relationship between FSH isoform and bioactivity may also be dynamic, with naturally occurring human FSH isoforms observed exhibiting differential or even unique effects at the target cell level.

Alexander and Irvine [105] have demonstrated a significant increase in the bioactive: immunoactive (B:I) ratio of equine LH in serum before ovulation, compared with the B:I ratio after ovulation. It is suggested that the change in B:I ratio may be due to a change in the carbohydrate composition of the molecule, i.e. a change in LH isoforms. In agreement with this observation, Adams et al. [106] also observed enhanced biopotency of equine LH during the preovulatory period. Adams et al. [106] suggested that enhanced biological activity of LH may be required during the preovulatory and luteal phases of the cycle to promote ovulation and proper luteal function.

Removal of gonadal steroids by ovariectomy also demonstrates a role for steroids in controlling gonadotropin isoform secretion. Ovariectomy of heifers causes a shift towards the more basic isoforms of LH and FSH, while supplementation of ovariectomised heifers with estradiol restored the LH and FSH isoform profiles to that of intact heifers [29]. However, in a further study Kojima et al. [101] failed to detect an effect of either ovariectomy or ovariectomy with estradiol supplementation on pituitary isoforms of FSH, while effects on LH were consistent with those of Stumpf et al. [29]. Where human patients suffering with polycystic ovaries were injected with estradiol there was a decrease in immunoactive FSH but not bioactive FSH resulting in an increase in serum B:I ratio, indicating a shift towards the more basic isoforms of FSH [107, 108].

It is unclear whether the effects of estradiol are directly associated with changes in FSH heterogeneity at the anterior pituitary or whether it acts via altered GnRH secretory patterns. Treatment of young women during the mid-follicular [109] and post-menopause phases [110, 111] with a GnRH antagonist dramatically suppressed bioactive FSH concentrations but not immunoactive FSH. In contrast, attempts to alter FSH isoform profiles directly by administering GnRH pulses (2 ng kg^{-1} body weight every 2 h for 24 h and every 1 h for a further 12 h), using the nutritionally restricted ovariectomised model, were unsuccessful [112]. This suggests that in the absence of a source of steroid hormones, GnRH administration was unable to alter isoform patterns of FSH. Thus, it is possible that the effects of GnRH on gonadotropin heterogeneity are dependant on alterations in steroid concentrations (likely estradiol).

Alexander and Irvine [105] have suggested that increased secretion of equine LH forms with higher biological activity during the preovulatory period occur due to the rising concentrations of serum estradiol and increased GnRH levels which may occur at this time [113]. Similarly, Adams et al. [106] propose that elevation of serum oestrogens may modify the process of post-translational processing of equine LH to effect secretion of a more biologically potent form. Alternatively, estradiol may be acting at an extra-hypophyseal site to control enzymes involved in the removal of sialic acid residues from glycoprotein hormones. Loss of sialic acid can affect equine LH in contrasting ways; increasing in vitro biological activity [71], but reducing in vivo half-life.

Bioactive FSH in serum was reported to increase, indicating a shift towards the basic forms, during pregnancy in humans (i.e. when steroid concentrations are physiologically high) while immunoactive FSH remained low [111, 114]. However, some of this increase in FSH

bioactivity has been questioned due to interference of high endogenous serum estradiol in the end point measurement in sertoli cell bioassays [115].

The following conclusions can be drawn.

1. Within a species, the α subunit is common to all the gonadotropins, while the β-subunit determines the biological specificity of the hormones.
2. A heterogenous array of oligosaccharides are found associated with the gonadotropins, and that variations in these oligosaccharide moieties generate the various isoforms of the gonadotropins.
3. Carbohydrate moieties of gonadotropins may play both a functional role in the binding of gonadotropins to their receptors but more likely play critical part in signal transduction. The precise role of the carbohydrate residues in signal transduction is not clearly understood; however in general, less acidic isoforms appear more bioactive than the more acidic isoforms with recent evidence also suggesting their bioactivity may be target specific.
4. Terminal sialic acid residues appear to be involved in increasing the circulatory half-life of the gonadotropins.
5. Estradiol concentrations are important in stimulating a shift towards bioactive forms of gonadotropin hormones during different physiological states; however the precise roles, if any, of GnRH in mediating these shifts are unclear.
6. During puberty bioactive isoforms of the gonadotropins increase.
7. There is an increase in bioactive forms of FSH during the follicular phase of the rat estrous cycle and the human menstrual cycle.
8. During pregnancy in humans there is an apparent increase in bioactive FSH concentrations in serum.

Author details

Dara J. Cooke, Michael P. Mullen* and Mark A. Crowe
School of Veterinary Medicine, University College Dublin, Ireland

11. References

[1] Moenter SM, Brand RC, Karsch FJ. Dynamics of gonadotropin-releasing hormone (GnRH) secretion during the GnRH surge: insights into the mechanism of GnRH surge induction. Endocrinology. 1992 May 1, 1992;130(5):2978-84.

[2] Sunderland SJ, Crowe MA, Boland MP, Roche JF, Ireland JJ. Selection, dominance and atresia of follicles during the estrous cycle of heifers. J Reprod Fertil. 1994 August 1, 1994;101(3):547-55.

[3] Sirois J, Fortune JE. Ovarian follicular dynamics during the estrous cycle in heifers monitored by real-time ultrasonography. Biol Reprod. 1988 September 1, 1988;39(2):308-17.

* Corresponding Author

[4] Savio JD, Keenan L, Boland MP, Roche JF. Pattern of growth of dominant follicles during the estrous cycle of heifers. J Reprod Fertil. 1988 July 1, 1988;83(2):663-71.
[5] Knopf L, Kastelic JP, Schallenberger E, Ginther OJ. Ovarian follicular dynamics in heifers: test of two-wave hypothesis by ultrasonically monitoring individual follicles. Domest Anim Endocrinol. 1989 Apr;6(2):111-9.
[6] Wilson CA, Leigh AJ, Chapman AJ. Gonadotrophin glycosylation and function. J Endocrinol. 1990 April 1, 1990;125(1):3-14.
[7] Combarnous Y. Molecular Basis of the Specificity of Binding of Glycoprotein Hormones to Their Receptors. Endocr Rev. 1992 November 1992;13(4):670-91.
[8] Stockell Hartree A, Renwick AG. Molecular structures of glycoprotein hormones and functions of their carbohydrate components. Biochem J. 1992 Nov 1;287 (Pt 3):665-79.
[9] Green ED, Boime I, Baenziger JU. Differential processing of Asn-linked oligosaccharides on pituitary glycoprotein hormones: implications for biologic function. Mol Cell Biochem. 1986;72(1):81-100.
[10] Nilsson BO, Rosen SW, Weintraub BD, Zopf DA. Differences in the Carbohydrate Moieties of the Common α-Subunits of Human Chorionic Gonadotropin, Luteinizing Hormone, Follicle-Stimulating Hormone, and Thyrotropin: Preliminary Structural Inferences from Direct Methylation Analysis. Endocrinology. 1986 December 1, 1986;119(6):2737-43.
[11] Green ED, Baenziger JU. Asparagine-linked oligosaccharides on lutropin, follitropin, and thyrotropin. I. Structural elucidation of the sulfated and sialylated oligosaccharides on bovine, ovine, and human pituitary glycoprotein hormones. J Biol Chem. 1988 January 5, 1988;263(1):25-35.
[12] Green ED, Baenziger JU. Asparagine-linked oligosaccharides on lutropin, follitropin, and thyrotropin. II. Distributions of sulfated and sialylated oligosaccharides on bovine, ovine, and human pituitary glycoprotein hormones. J Biol Chem. 1988 January 5, 1988;263(1):36-44.
[13] Van Damme MP, Robertson DM, Marana R, Ritzén EM, Diczfalusy E. A sensitive and specific in vitro bioassay method for the measurement of follicle-stimulating hormone activity. Acta Endocrinol (Copenh). 1979 June 1, 1979;91(2):224-37.
[14] Ascoli M. Characterization of Several Clonal Lines of Cultured Ley dig Tumor Cells: Gonadotropin Receptors and Steroidogenic Responses. Endocrinology. 1981 January 1, 1981;108(1):88-95.
[15] Jia X-C, Hsueh AJW. Granulosa Cell Aromatase Bioassay for Follicle-Stimulating Hormone: Validation and Application of the Method. Endocrinology. 1986 October 1, 1986;119(4):1570-7.
[16] Dahl KD, Stone MP. FSH isoforms, radioimmunoassays, bioassays, and their significance. J Androl. 1992;13(1):11-22.
[17] Ryan RJ, Keutmann HT, Charlesworth MC, McCormick DJ, Milius RP, Calvo FO, et al. Structure-function relationships of gonadotropins. Recent Prog Horm Res. 1987;43:383-429.

[18] Ryan RJ, Charlesworth MC, McCormick DJ, Milius RP, Keutmann HT. The glycoprotein hormones: recent studies of structure-function relationships. The FASEB Journal. 1988 August 1, 1988;2(11):2661-9.
[19] Combarnous Y. Structure and structure-function relationships in gonadotropins. Reprod Nutr Dev. 1988;28(2A):211-28.
[20] Gray CJ. Glycoprotein gonadotropins. Structure and synthesis. Acta Endocrinol Suppl (Copenh). 1988;288:20-7.
[21] Hirschberg CB, Snider MD. Topography of Glycosylation in The Rough Endoplasmic Reticulum and Golgi Apparatus. Annu Rev Biochem. 1987;56(1):63-87.
[22] Goodwin RG, Moncman CL, Rottman FM, Nilson JH. Characterization and nucleotide sequence of the gene for the common α subunit of the bovine pituitary glycoprotein hormones. Nucleic Acids Res. 1983 October 11, 1983;11(19):6873-82.
[23] Stewart F, Thomson JA, Leigh SEA, Warwick JM. Nucleotide (cDNA) sequence encoding the horse gonadotrophin α-subunit. J Endocrinol. 1987 November 1, 1987;115(2):341-6.
[24] Pierce JG, Parsons TF. Glycoprotein Hormones: Structure and Function. Annu Rev Biochem. 1981;50(1):465-95.
[25] Boothby M, Ruddon RW, Anderson C, McWilliams D, Boime I. A single gonadotropin alpha-subunit gene in normal tissue and tumor-derived cell lines. J Biol Chem. 1981 May 25, 1981;256(10):5121-7.
[26] Ward DN, Bousfield GR, Moore KH. Gonadotropins. In: P.T. Cupps (Editor), Reproduction in Domestic Animals, 4th edn. Academic Press, San Diego, CA, pp. 25-80.; 1991; 1991.
[27] Keel BA, Schanbacher BD, Grotjan HE. Ovine luteinizing hormone. I. Effects of castration and steroid administration on the charge heterogeneity of pituitary luteinizing hormone. Biol Reprod. 1987 June 1, 1987;36(5):1102-13.
[28] Padmanabhan V, Lang LL, Sonstein J, Kelch RP, Beitins IZ. Modulation of Serum Follicle-Stimulating Hormone Bioactivity and Isoform Distribution by Estrogenic Steroids in Normal Women and in Gonadal Dysgenesis. J Clin Endocrinol Metab. 1988 September 1, 1988;67(3):465-73.
[29] Stumpf TT, Roberson MS, Wolfe MW, Zalesky DD, Cupp AS, Werth LA, et al. A similar distribution of gonadotropin isohormones is maintained in the pituitary throughout sexual maturation in the heifer. Biol Reprod. 1992 March 1, 1992;46(3):442-50.
[30] Gharib SD, Wierman ME, Shupnik MA, Chin WW. Molecular Biology of the Pituitary Gonadotropins. Endocr Rev. 1990 February 1990;11(1):177-99.
[31] Ward DN, Boustield GR. FSH structures and their relationships to the other glycoprotein hormones. In: W.W. Chin and L. Boime (Editors), Glycoprotein hormones: structure, synthesis and biologic function. Proc. Serono Symposium, March 1989, Newport Beach, CA. Serono Symposia USA, Norwell, MA, pp. 81-95.; 1990; 1990.
[32] Ward DN, Boustield GR, Gordon WL, Sugino H. Chemistry of the peptide components of glycoprotein hormones. In: B.A. Keel and H.E. Grotjan, Jr. (Editors), Microheterogeneity of glycoprotein hormones. CRC Press, Boca Raton, FL, pp. I-21. . 1989; 1989.

[33] Cornell JS, Pierce JG. Studies on the Disulfide Bonds of Glycoprotein Hormones. J Biol Chem. 1974 July 10, 1974;249(13):4166-74.
[34] Mise T, Bahl OP. Assignment of disulfide bonds in the alpha subunit of human chorionic gonadotropin. J Biol Chem. 1980 September 25, 1980;255(18):8516-22.
[35] Strickland TW, Puett D. Contribution of Subunits to the Function of Luteinizing Hormone/Human Chorionic Gonadotropin Recombinants. Endocrinology. 1981 December 1, 1981;109(6):1933-42.
[36] Bousfield GR, Liu W-K, Ward DN. Hybrids from equine LH: alpha enhances, beta diminishes activity. Mol Cell Endocrinol. 1985;40(1):69-77.
[37] Chung D, Sairam MR, Li CH. The primary structure of ovine interstitial cell-stimulating hormone III: Disulfide bridges of the α-subunit. Arch Biochem Biophys. 1973;159(2):678-82.
[38] Combarnous Y, Hennen G. The Disulphide Bridges of Porcine Luteinizing Hormone α Subunit. Biochem Soc Trans. 1974;2:915-7.
[39] Fujiki Y, Rathnam P, Saxena BB. Studies on the disulfide bonds in human pituitary follicle-stimulating hormone. Biochimica et Biophysica Acta (BBA) - Protein Structure. 1980;624(2):428-35.
[40] Hubbard SC, Ivatt RJ. Synthesis and Processing of Asparagine-Linked Oligosaccharides. Annu Rev Biochem. 1981;50(1):555-83.
[41] Kornfeld R, Kornfeld S. Assembly of Asparagine-Linked Oligosaccharides. Annu Rev Biochem. 1985;54(1):631-64.
[42] Parsons TF, Bloomfield GA, Pierce JG. Purification of an alternate form of the alpha subunit of the glycoprotein hormones from bovine pituitaries and identification of its O-linked oligosaccharide. J Biol Chem. 1983 January 10, 1983;258(1):240-4.
[43] Corless CL, Boime I. Differential Secretion of O-Glycosylated Gonadotropin α-Subunit and Luteinizing Hormone (LH) in the Presence of LH-Releasing Hormone. Endocrinology. 1985 October 1, 1985;117(4):1699-706.
[44] Kourides IA, Landon MB, Hoffman BJ, Weintraub BD. Excess free alpha relative to beta subunits of the glycoprotein hormones in normal and abnormal human pituitary glands. Clin Endocrinol (Oxf). 1980;12(4):407-16.
[45] Fetherston J, Boime I. Synthesis of bovine lutropin in cell-free lysates containing pituitary microsomes. J Biol Chem. 1982 July 25, 1982;257(14):8143-7.
[46] Parsons TF, Pierce JG. Free alpha-like material from bovine pituitaries. Removal of its O-linked oligosaccharide permits combination with lutropin-beta. J Biol Chem. 1984 February 25, 1984;259(4):2662-6.
[47] Hoshina H, Boime I. Combination of rat lutropin subunits occurs early in the secretory pathway. Proc Natl Acad Sci U S A. 1982;79(24):7649-53.
[48] Ruddon RW, Krzesicki RF, Norton SE, Beebe JS, Peters BP, Perini F. Detection of a glycosylated, incompletely folded form of chorionic gonadotropin beta subunit that is a precursor of hormone assembly in trophoblastic cells. J Biol Chem. 1987 September 15, 1987;262(26):12533-40.
[49] Cooke DJ, Crowe MA, Roche JF, Headon DR. Gonadotrophin heterogeneity and its role in farm animal reproduction. Anim Reprod Sci. 1996;41(2):77-99.

[50] Birken S, Cranfield RE. Isolation and amino acid sequence of COOH-terminal fragments from the Â-subunit of human choriogonadotropin. J Biol Chem. 1977(252):5386-92.
[51] Keutmann HT, Johnson L, Ryan RJ. Evidence for a conformational change in deglycosylated glycoprotein hormones. FEBS Lett. 1985;185(2):333-8.
[52] Bousfield GR, Sugino H, Ward DN. Demonstration of a COOH-terminal extension on equine lutropin by means of a common acid-labile bond in equine lutropin and equine chorionic gonadotropin. J Biol Chem. 1985 August 15, 1985;260(17):9531-3.
[53] Graham MY, Otani T, Boime I, Olson MV, Carle GF, Chaplin DD. Cosmid mapping of the human chorionic gonadotropin β subunit genes by field-inversion gel elect rophoresis. Nucleic Acids Res. 1987 June 11, 1987;15(11):4437-48.
[54] Tsunasawa S, Liu W-K, Burleigh BD, Ward DN. Studies of disulfide bond location in ovine lutropin β subunit. Biochimica et Biophysica Acta (BBA) - Protein Structure. 1977;492(2):340-56.
[55] Green ED, van Halbeek H, Boime I, Baenziger JU. Structural elucidation of the disulfated oligosaccharide from bovine lutropin. J Biol Chem. 1985 December 15, 1985;260(29):15623-30.
[56] Miller C, Ulloa-Aguirre A, Hyland L, Chappel S. Pituitary follicle-stimulating hormone heterogeneity: assessment of biologic activities of each follicle-stimulating hormone form. Fertil Steril. 1983 Aug;40(2):242-7.
[57] Chappel SC, Bethea CL, Spies HG. Existence of Multiple Forms of Follicle-Stimulating Hormone within the Anterior Pituitaries of Cynomolgus Monkeys. Endocrinology. 1984 August 1, 1984;115(2):452-61.
[58] Blum WFP, Gupta D. Heterogeneity of rat FSH by chromatofocusing: studies on serum FSH, hormone released in vitro and metabolic clearance rates of its various forms [ill]. J Endocrinol. 1985 April 1, 1985;105(1):29-37.
[59] Matteri RL, Papkoff H. Microheterogeneity of equine follicle-stimulating hormone. Biol Reprod. 1988 March 1, 1988;38(2):324-31.
[60] Stanton PG, Robertson DM, Burgon PG, Schmauk-White B, Hearn MT. Isolation and physicochemical characterization of human follicle-stimulating hormone isoforms. Endocrinology. 1992 May 1, 1992;130(5):2820-32.
[61] Kessler MJ, Mise T, Ghai RD, Bahl OP. Structure and location of the O-glycosidic carbohydrate units of human chorionic gonadotropin. J Biol Chem. 1979 August 25, 1979;254(16):7909-14.
[62] Kessler MJ, Reddy MS, Shah RH, Bahl OP. Structures of N-glycosidic carbohydrate units of human chorionic gonadotropin. J Biol Chem. 1979 August 25, 1979;254(16):7901-8.
[63] Mizuochi T, Kobata A. Different asparagine-linked sugar chains on the two polypeptide chains of human chorionic gonadotropin. Biochem Biophys Res Commun. 1980;97(2):772-8.
[64] Green ED, Boime I, Baenziger JU. Biosynthesis of sulfated asparagine-linked oligosaccharides on bovine lutropin. J Biol Chem. 1986 December 15, 1986;261(35):16309-16.

[65] Sairam MR. Studies on pituitary follitropin: I. An improved procedure for the isolation of highly potent ovine hormone. Arch Biochem Biophys. 1979;194(1):63-70.
[66] Parsons TF, Pierce JG. Oligosaccharide moieties of glycoprotein hormones: bovine lutropin resists enzymatic deglycosylation because of terminal O-sulfated N-acetylhexosamines. Proc Natl Acad Sci U S A. 1980;77(12):7089-93.
[67] Ryle M, Chaplain MF, Gray CJ, Kennedy JF. In: W.R. Butt, A.C. Crooke and M. Ryle (Editors), Gonadotropins and Ovarian Development. Livingston, London, pp. 98- 106. 1970.
[68] Morell AG, Gregoriadis G, Scheinberg IH, Hickman J, Ashwell G. The Role of Sialic Acid in Determining the Survival of Glycoproteins in the Circulation. J Biol Chem. 1971 March 10, 1971;246(5):1461-7.
[69] Ulloa-Aguirre A, Miller C, Hyland L, Chappel S. Production of all follicle-stimulating hormone isohormones from a purified preparation by neuraminidase digestion. Biol Reprod. 1984 March 1, 1984;30(2):382-7.
[70] Ulloa-Aguirre A, Mejia JJ, Dominguez R, Guevara-Aguirre J, Diaz-Sánchez V, Larrea F. Microheterogeneity of anterior pituitary FSH in the male rat: isoelectric focusing pattern throughout sexual maturation. J Endocrinol. 1986 September 1, 1986;110(3):539-49.
[71] Aggarwal BB, Papkoff H. Relationship of sialic acid residues to in vitro biological and immunological activities of equine gonadotropins. Biol Reprod. 1981 Jun;24(5):1082-7.
[72] West CR, Carlson NE, Lee JS, McNeilly AS, Sharma TP, Ye W, et al. Acidic Mix of FSH Isoforms Are Better Facilitators of Ovarian Follicular Maturation and E2 Production than the Less Acidic. Endocrinology. 2002 January 1, 2002;143(1):107-16.
[73] Goverman JM, Parsons TF, Pierce JG. Enzymatic deglycosylation of the subunits of chorionic gonadotropin. Effects on formation of tertiary structure and biological activity. J Biol Chem. 1982 December 25, 1982;257(24):15059-64.
[74] Calvo FO, Keutmann HT, Bergert ER, Ryan RJ. Deglycosylated human follitropin: characterization and effects on adenosine cyclic 3',5'-phosphate production in porcine granulosa cells. Biochemistry (Mosc). 1986 Jul 1;25(13):3938-43.
[75] Berman MI, Thomas Jr CG, Manjunath P, Sairam MR, Nayfen SN. The role of the carbohydrate moiety in thyrotropin action. Biochem Biophys Res Commun. 1985;133(2):680-7.
[76] Manjunath P, Sairam MR, Sairam J. Studies on pituitary follitropin X. Biochemical, receptor binding and immunological properties of deglycosylated ovine hormone. Mol Cell Endocrinol. 1982;28(2):125-38.
[77] Sairam MR, Bhargavi GN. A role for glycosylation of the alpha subunit in transduction of biological signal in glycoprotein hormones. Science. 1985 July 5, 1985;229(4708):65-7.
[78] Cole LA, Metsch LA, Grotjan HE. Significant Steroidogenic Activity of Luteinizing Hormone is Maintained after Enzymatic Removal of Oligosaccharides. Mol Endocrinol. 1987 September 1, 1987;1(9):621-7.
[79] Sairam MR, Manjunath P. Studies on pituitary follitropin XI. Induction of hormonal antagonistic activity by chemical deglycosylation. Mol Cell Endocrinol. 1982;28(2):139-50.

[80] Liu WK, Young JD, Ward DN. Deglycosylated ovine lutropin: preparation and characterization by in vitro binding and steroidogenesis. Mol Cell Endocrinol. 1984 Aug;37(1):29-39.
[81] Liu L, Southers JL, Banks SM, Blithe DL, Wehmann RE, Brown JH, et al. Stimulation of Testosterone Production in the Cynomolgus Monkey in Vivo by Deglycosylated and Desialylated Human Choriogonadotropin. Endocrinology. 1989 January 1, 1989;124(1):175-80.
[82] Patton PE, Calvo FO, Fujimoto VY, Bergert ER, Kempers RD, Ryan RJ. The effect of deglycosylated human chorionic gonadotropin on corpora luteal function in healthy women. Fertil Steril. 1988;49(4):620-5.
[83] Sairam MR. Deglycosylation of ovine pituitary lutropin subunits: Effects on subunit interaction and hormone activity. Arch Biochem Biophys. 1980;204(1):199-206.
[84] Begeot M, Hemming FJ, Dubois PM, Combarnous Y, Dubois MP, Aubert ML. Induction of pituitary lactotrope differentiation by luteinizing hormone alpha subunit. Science. 1984 November 2, 1984;226(4674):566-8.
[85] Blithe DL, Richards RG, Skarulis MC. Free alpha molecules from pregnancy stimulate secretion of prolactin from human decidual cells: a novel function for free alpha in pregnancy. Endocrinology. 1991 October 1, 1991;129(4):2257-9.
[86] Baenziger JU, Green ED. Pituitary glycoprotein hormone oligosaccharides: Structure, synthesis and function of the asparagine-linked oligosaccharides on lutropin, follitropin and thyrotropin. Biochimica et Biophysica Acta (BBA) - Reviews on Biomembranes. 1988;947(2):287-306.
[87] Habner JF. Molecular Cloning of Hormone Genes. Humana Press, Clifton Press, NJ. 1987.
[88] Chin WW, Boime JW. Glycoprotein Hormones: Structure, Synthesis and Biologic Function. Plenum Press, New York. 1990.
[89] Giudice LC, Waxdal MJ, Weintraub BD. Comparison of bovine and mouse pituitary glycoprotein hormone pre-alpha subunits synthesized in vitro. Proc Natl Acad Sci U S A. 1979 Oct;76(10):4798-802.
[90] Landefeld TD. Identification of in vitro synthesized pituitary glycoprotein alpha subunit. Translation of a possible precursor. J Biol Chem. 1979 May 25, 1979;254(10):3685-8.
[91] Godine JE, Chin WW, Habener JF. Cell-free synthesis and processing of the precursors to the subunits of luteinizing hormone. J Biol Chem. 1981 March 10, 1981;256(5):2475-9.
[92] Jackson RC, Blobel G. Post-translational processing of full-length presecretory proteins with canine pancreatic signal peptidase. Ann N Y Acad Sci. 1980;343(1):391-404.
[93] Weintraub BD, Stannard BS, Linnekin D, Marshall M. Relationship of glycosylation to de novo thyroid-stimulating hormone biosynthesis and secretion by mouse pituitary tumor cells. J Biol Chem. 1980 June 25, 1980;255(12):5715-23.
[94] Lodish HF. Transport of secretory and membrane glycoproteins from the rough endoplasmic reticulum to the Golgi. A rate-limiting step in protein maturation and secretion. J Biol Chem. 1988 February 15, 1988;263(5):2107-10.

[95] Padmanabhan V, Mieher CD, Borondy M, I'Anson H, Wood RI, Landefeld TD, et al. Circulating bioactive follicle-stimulating hormone and less acidic follicle-stimulating hormone isoforms increase during experimental induction of puberty in the female lamb. Endocrinology. 1992 July 1, 1992;131(1):213-20.

[96] Chappel SC, Ulloa-Aguirre A, Ramaley JA. Sexual maturation in female rats: time-related changes in the isoelectric focusing pattern of anterior pituitary follicle-stimulating hormone. Biol Reprod. 1983 February 1, 1983;28(1):196-205.

[97] Chappel SC, Ramaley JA. Changes in the isoelectric focusing profile of pituitary follicle-stimulating hormone in the developing male rat. Biol Reprod. 1985 April 1, 1985;32(3):567-73.

[98] Zalesky DD, Nett TM, Grotjan HE. Ovine luteinizing hormone: isoforms in the pituitary during the follicular and luteal phases of the estrous cycle and during anestrus. J Anim Sci. 1992 December 1, 1992;70(12):3851-6.

[99] Ulloa-Aguirre A, Espinoza R, Damian-Matsumura P, Larrea F, Flores A, Morales L, et al. Studies on the microheterogeneity of anterior pituitary follicle-stimulating hormone in the female rat. Isoelectric focusing pattern throughout the estrous cycle. Biol Reprod. 1988 February 1, 1988;38(1):70-8.

[100] Anobile CJ, Talbot JA, McCann SJ, Padmanabhan V, Robertson WR. Glycoform composition of serum gonadotrophins through the normal menstrual cycle and in the post-menopausal state. Mol Hum Reprod. 1998 July 1, 1998;4(7):631-9.

[101] Kojima FN, Cupp AS, Stumpf TT, Zalesky DD, Roberson MS, Werth LA, et al. Effects of 17 beta-estradiol on distribution of pituitary isoforms of luteinizing hormone and follicle-stimulating hormone during the follicular phase of the bovine estrous cycle. Biol Reprod. 1995 February 1, 1995;52(2):297-304.

[102] Cooke DJ, Crowe MA, Roche JF. Circulating FSH isoform patterns during recurrent increases in FSH throughout the estrous cycle of heifers. J Reprod Fertil. 1997 July 1, 1997;110(2):339-45.

[103] Crowe MA, Padmanabhan V, Mihm M, Beitins IZ, Roche JF. Resumption of follicular waves in beef cows is not associated with periparturient changes in follicle-stimulating hormone heterogeneity despite major changes in steroid and luteinizing hormone concentrations. Biol Reprod. 1998 June 1, 1998;58(6):1445-50.

[104] Timossi CM, Barrios-de-Tomasi J, Gonzalez-Suarez R, Arranz MC, Padmanabhan V, Conn PM, et al. Differential effects of the charge variants of human follicle-stimulating hormone. J Endocrinol. 2000 May 1, 2000;165(2):193-205.

[105] Alexander S, Irvine CH. Radioimmunoassay and in-vitro bioassay of serum LH throughout the equine estrous cycle. J Reprod Fertil Suppl. 1982;32:253-60.

[106] Adams TE, Horton MB, Watson JG, Adams BM. Biological activity of Luteinizing Hormone (LH) during the estrous cycle of mares. Domest Anim Endocrinol. 1986;3(2):69-77.

[107] Padmanabhan V, Christman GM, Zawacki CM, Kelch RP, Randolf J, J.F.,, Beitins IZ. Regulation of bioactive FSH in women with polycystic ovarian disease. 72nd Annual Meeting of the Endocrine Society, 20-23 June 1990, Atlanta, GA, Abstr 1369, p 367; 1990; 1990.

[108] Beitins IZ, Kletter GB, Padmanabhan V. Clinical applications of FSH bioassays In: M.L. Dufau, A. Fabbri and A. Isidori (Editors) Cell and Molecular Biology of the Testes. Ares Serono Symposia Series. Frontiers in Endocrinol., 5: 99- 114. 1993.

[109] Kessel B, Dahl KD, Kazer RR, Liu CH, Rivier J, Vale W, et al. The Dependency of Bioactive Follicle-Stimulating Hormone Secretion on Gonadotropin-Releasing Hormone in Hypogonadal and Cycling Women. J Clin Endocrinol Metab. 1988 February 1, 1988;66(2):361-6.

[110] Matikainen T, Ding YQ, Vergara M, Huhtaniemi I, Couzinet B, Schaison G. Differing responses of plasma bioactive and immunoreactive follicle-stimulating hormone and luteinizing hormone to gonadotropin-releasing hormone antagonist and agonist treatments in postmenopausal women. J Clin Endocrinol Metab. 1992 September 1, 1992;75(3):820-5.

[111] Padmanabhan V, Sonstein J, Olton PL, Nippoldt T, Menon KMJ, Marshall JC, et al. Serum Bioactive Follicle-Stimulating Hormone-Like Activity Increases during Pregnancy. J Clin Endocrinol Metab. 1989 November 1, 1989;69(5):968-77.

[112] Hassing JM, Kletter GB, I'Anson H, Wood RI, Beitins IZ, Foster DL, et al. Pulsatile administration of gonadotropin-releasing hormone does not alter the follicle-stimulating hormone (FSH) isoform distribution pattern of pituitary or circulating FSH in nutritionally growth-restricted ovariectomized lambs. Endocrinology. 1993 April 1, 1993;132(4):1527-36.

[113] Irvine CHG. Endocrinology of the estrous cycle of the mare: Applications to embryo transfer. Theriogenology. 1981;15(1):85-104.

[114] Simoni M, Khan SA, De Geyter C, Nieschlag E. Stimulatory and inhibitory influences of serum from pregnant women on aromatase activity of immature rat Sertoli cells. Acta Endocrinol (Copenh). 1989 August 1, 1989;121(2):265-9.

[115] Simoni M, Nieschlag E. In vitro bioassays of follicle-stimulating hormone: methods and clinical applications. J Endocrinol Invest. 1991 Dec;14(11):983-97.