We are IntechOpen, the world's leading publisher of Open Access books Built by scientists, for scientists

6,900
Open access books available

185,000
International authors and editors

200M
Downloads

Our authors are among the

154
Countries delivered to

TOP 1%
most cited scientists

12.2%
Contributors from top 500 universities

WEB OF SCIENCE™

Selection of our books indexed in the Book Citation Index in Web of Science™ Core Collection (BKCI)

Interested in publishing with us?
Contact book.department@intechopen.com

Numbers displayed above are based on latest data collected.
For more information visit www.intechopen.com

17

Techno-Economic Evaluation of Large Scale 2.5-Dimethylfuran Production from Fructose

Fábio de Ávila Rodrigues and Reginaldo Guirardello
State University of Campinas, School of Chemical Engineerging
Brazil

1. Introduction

In an era of increasing oil prices and climate concerns, biofuels have gained more and more attention as potential fuel alternative energy sources. Governments have become active in the target of securing a supply of raw materials and limiting climate change, and many innovative proposals have been made, development work has started and potential candidate fuels have been studied in the energy area (Schaub & Vetter, 2008).

A number of factors must be considered when evaluating biofuels: technical factors (raw materials, supply, conversion and engines), economic (engine modification cost, infrastructure) and ecological/political (greenhouse gases, land use efficiency, oil dependence reduction) (Festel, 2008).

An end-user survey assessed car customer acceptance and attitude toward biofuels and revealed that their main demands are: price (48%), biofuel price should not exceed fossil fuels prices and there should be no cost in engine modification; environment (24%); consumption (19%) and performance (9%) (Festel, 2008).

Since customers consider the final cost as a decisive factor, the economic analysis is an important tool in the assessment of the success of biofuel production process and consequent market success. Achieving economic viability used to be the key to success, but today, other factors are important, such as sustainability.

Leshkov et al. (2007) show a catalytic strategy for the production of 2.5 dimethylfuran (DMF) from fructose (a carbohydrate obtained directly from biomass or by the isomerization of glucose) for use as a liquid transportation fuel. Compared to ethanol, 2.5-dimethylfuran has a higher energy density (by 40 percent), a higher boiling point (by 20K), and is not soluble in water. This catalytic strategy creates a route for transforming abundant renewable biomass resources into a liquid fuel suitable or the transportation sector and it is also a CO_2 free process.

The first step in production is to convert fructose to hydroxymethylfurfural (HMF) using an acid catalyst (HCl) and a solvent with a low boiling point in a biphasic reactor. The reactive aqueous phase in the biphasic reactor contains acid and sugar, and the extractive phase contains a partially miscible organic solvent (eg, 1-butanol) that continuously extracts HMF. The addition of a salt to the aqueous phase improves the partitioning of HMF into the

extracting phase, and leads to increased HMF yields without the use of high boiling point solvents. Following, water, HCl and solvent evaporate, leading to precipitation of NaCl. Then, HMF is converted into DMF under a copper-ruthenium based catalyst. The final step involves the separation of DMF from the solvent and the non-reacted intermediates. As described below, the process also involves two separation steps. A schematic diagram of fructose conversion to DMF was reported by Leshkov et al. (2007).

The purpose of this paper is to evaluate economically the process production of DMF from fructose. In the present work the following analysis were carried out: Firstly, thermodynamic process modeling was investigated. Following this, the Process Flow Diagram (PFD) was developed from schematic diagram reported by Leshkov et al. (2007). The simulation stage makes use data from Leshkov et al. (2007). The thermal energy required for each piece of equipment was assessed with material and energy balances for each system using the UNISim™ software. Each piece of equipment is then approximately sized for economic analysis.

2. Thermodynamic modeling

The thermodynamic equilibrium of a system consisted of a multicomponent mixture takes place when temperature, pressure and chemical potential of components are equated between the phases, for each component. Although there are other basic criteria for system equilibrium, the minimization of Gibbs free energy is the condition which ensures equilibrium. Salt can affect the solubility of the system components with the formation of complex associations. In general it can be inferred that the particles (molecules, ions, or both) of dissolved salt tend to attract molecules from one of the system components more strongly than others.

The work of Debye and Huckel (1923) was the first important academic contribution and established a model for long-range interactions between ions based on the concept of ionic strength. A different family of models was developed using another extension of the Debye-Huckel model to represent the different contributions to Gibbs free energy excess. Implementation of the local composition to electrolytes means it is governed by local interactions such as short-range solvent/solvent, short-range ion/solvent and long-range ion/ion interactions that exist around the immediate neighborhood of a central ionic species (Aznar, 1996). For the contribution of short-range the following models of local composition can be used: Non-Random Two Liquid model (NRTL) (Renon and Prausnitz, 1968), UNIQUAC (Abrams and Prausnitz, (1975)) or UNIversal Functional Activity Coefficient (UNIFAC) (Fredenslund et al., 1977). The Debye-Huckel term or one of its variations, such as Fowler and Guggnheim (1949) or the Pitzer (1973) are used for long-range interactions. A series of different combinations have been proposed with these elements.

The hypothesis in this work was that salt should be treated as simple molecule, non-dissociated, rather than as charged ions distributed in the solution. Most works concerning the phase equilibrium in systems containing electrolytes distinguish long-range contributions due to electrostatic forces between ions and between ion and solvent from short-range contributions due to interactions between molecules. Two different models are then used for each contribution type. Considering salt as a simple molecule eliminates both contributions and requires only one appropriate model to describe the interactions between

all molecules in solution, solvent or electrolyte (Aznar, 1996). Therefore, no specific model for electrolytes was used in this study. The UNIQUAC model was used to obtain the activity coefficient. According to Mock et al. (1986), although the contribution of long-range interaction of the equation of Pitzer-Debye-Huckel is important to obtain the ionic activity coefficient in the aqueous phase, it has little effect on the behavior of the equilibrium phase of the water-organic solvent system. Thus, the effect of the electrolyte is considered only for non-ideality, represented by the adjustable model parameters.

The binary interaction parameters of UNIQUAC model were estimated from experimental data (Santis et al., 1976a, 1976b), from Catté et al. (1994) and for the UNIFAC method. The tables 2, 3 e 4 show the data experimental used to estimate the binary interactions parameters. A Fortran programming language was used to determine the parameters from experimental data. The UNISIM™ software was used to estimate parameters for the UNIFAC method.

	Water	1-butanol	DMF	Fructose	HCl	HMF	NaCl
Water	-	89.22*	1543′	-153.35**	1160′	1361′	-455*
1-butanol	208*	-	383′	223′	1421′	530′	863*
DMF	249′	-90′	-	73′	-	-146′	-371′
Fructose	324**	91′	892′	-	-197′	1.412′	160′
HCl	-674′	-179′	-	399′	-	702′	-266′
HMF	-121′	-1155′	564′	162′	2,776′	-	2479′
NaCl	-165*	1251*	1793′	354′	2943′	1391′	-

* Binary interaction parameters of UNIQUAC model estimated from experimental data from Santis et al. (1976a, 1976b).
** Catté et al. (1994).
′ Binary interaction parameter estimated from UNIFAC method.

Table 1. Binary interaction parameters of UNIQUAC model

Aqueous Phase			Organic Phase		
Water	1-butanol	NaCl	Water	1-butanol	NaCl
92.60	7.4	-	20.4	79.6	-
92.04	6.8	1.16	18.78	81.2	0.025
91.64	6.1	2.26	17.45	82.5	0.045
90.85	5.8	3.35	16.64	83.3	0.061
90.60	5.0	4.40	15.43	84.5	0.074
89.96	4.6	5.44	14.6	85.3	0.086
89.16	4.4	6.44	14.1	85.8	0.095
87.84	3.7	8.46	13.29	86.6	0.110
86.30	3.3	10.4	12.48	87.4	0.122
85.10	2.7	12.2	11.37	88.5	0.130
83.50	2.5	14.0	10.66	89.2	0.138
82.20	2.0	15.8	8.75	90.1	0.144
80.90	1.7	17.4	9.05	90.8	0.148
79.40	1.5	19.1	8.55	91.3	0.153
78.00	1.3	20.7	7.94	91.9	0.156
76.70	1.1	22.2	7.34	92.5	0.159
75.20	0.9	23.9	7.04	92.8	0.162
74.00	0.8	25.2	6.54	93.3	0.164
73.30	0.8	25.9	6.43	93.4	0.167
73.30	0.8	25.9	6.23	93.6	0.167

Table 2. Liquid-liquid equilibrium in the system water-1-butanol-NaCl (Santis et al., 1976a)

Aqueous Phase			Organic Phase		
water	1-butanol	NaCl	water	1-butanol	NaCl
92.90	7.10	-	20.60	79.4	-
92.43	6.42	1.15	18.77	81.2	0.026
92.04	5.70	2.26	17.75	82.2	0.045
91.22	5.44	3.34	16.74	83.2	0.061
90.59	5.00	4.41	15.92	84.0	0.075
89.96	4.59	5.45	15.31	84.6	0.086
89.28	4.24	6.48	14.70	85.2	0.096
87.9	3.60	8.50	13.69	86.2	0.111
86.46	3.04	10.5	12.68	87.2	0.123
85.01	2.59	12.4	11.87	88.0	0.132
83.35	2.45	14.2	11.26	88.6	0.140
82.19	1.81	16.0	1.15	89.7	0.146
80.79	1.51	17.7	9.35	90.5	0.150
79.67	1.23	19.1	8,74	91.1	0.155
77.97	1.03	21.0	7.84	92.0	0.158
76.51	0.89	22.6	7.44	92.4	0.161
75.15	0.75	24.1	6.94	92.9	0.164
73.81	0.69	25.5	6.63	93.2	0.166
73.34	0.68	26.0	6.43	93.4	0.169

Table 3. Liquid-liquid equilibrium in the system water-1-butanol-NaCl (Santis et al., 1976a)

Aqueous Phase			Organic Phase		
water	1-butanol	NaCl	water	1-butanol	NaCl
93.40	6.60	-	21.40	78.6	-
92.85	5.96	1.19	19.68	80.3	0.021
92.44	5.25	2.31	18.36	81.6	0.041
91.88	4.70	3.42	17.54	82.4	0.060
90.86	4.61	4.53	16.83	83.1	0.072
90.21	4.21	5.58	16.31	83.6	0.085
89.49	3.86	6.65	15.50	84.4	0.095
88.04	3.27	8.69	14.49	85.4	0.111
86.62	2.78	10.6	13.58	86.3	0.122
85.19	2.31	12.5	12.77	87.1	0.131
83.70	1.90	14.4	11.96	87.9	0.139
82.10	1.70	16.2	11.25	88.6	0.146
80.92	1.28	17.8	10.35	89.5	0.151
79.59	1.01	19.4	9.44	90.4	0.156
78.18	0.82	21.0	8.84	91.0	0.160
76.74	0.66	22.6	8.34	91.5	0.163
75.36	0.54	24.1	7.83	92.0	0.166
73.9	0.50	25.6	7.53	92.3	0.170
73.42	0.48	26.1	7.03	92.8	0.173
73.42	0.48	26.1	7.03	92.8	0.173

Table 4. Liquid-liquid equilibrium in the system water-1-butanol-NaCl (Santis et al., 1976b)

3. Simulation

Simulation of DMF plant production was based on the standard conditions by Leshkov et al. (2007) from which it was developed a process flow diagram (PFD). The following unit operations compose the production plant: pumps, heat exchangers, one reactor for conversion of fructose into HMF (CRV-102) and one reactor for conversion of HMF into DMF (CRV-101), two stripping columns (T-100 and T-101), one distillation column (T-102). The volume of feed was of 30% fructose and the ratio between the organic phase and the aqueous phase volume was of 3.1 in the biphasic reactor (CRV-102). The conversion of fructose is 75% and the conversion of HMF to DMF is 100%.

Unreacted fructose was recycled back into the biphasic reactor. 1-Butanol was then separated from the water in the organic biphasic reactor. Cezário et al. (2009) proposed a separation system for water and 1-butanol composed by two stripping columns, one cooler and one settling tank. The formation of heterogeneous azeotrope turns this separation process more difficult and two liquid phases are formed in the decanter. This system can separate 98% of 1-butanol. Literature provides various processes for separating 1-butanol from water but the most traditional recovery process is distillation. Other techniques are adsorption, liquid-liquid extraction, evaporation and reverse osmosis. The energy required to recover 1-butanol by adsorption is of 1948 kcal/kg while the stripping column method requires 5789 kcal/kg. Other techniques such as perevaporation requires 3295 kcal/kg 1-butanol (Qureshi et al., 2005). The last step was to separate DMF from 1-butanol. The proposed separation system was composed by a distillation column (T-102) which separated 92% of DMF. The T-102 operates with reflux rate of 85 kgmol/h and top component (DMF) fraction of 0.9. The 1-butanol recovered in the T-102 was recycled.

Thus, material and energy balances were then solved using UNISim™ software and is showed in Table 5.

	1h	2h	3h	5h	8
Temperature (°C)	25	25	25	25	25
Pressure (kPa)	101	101	101	101	1351
Massic flow (kg/h)	896	1000	864	52	896
Enthalpy (kJ/kgmol)	-275200	-290600	-290500	-326600	-275200
Composition (massic fraction)					
water	0.9	0.7	0.5372	-	0.9
1-butanol	-	-	-	1	-
Fructose	-	0.3	-	-	-
Hmf	-	-	-	-	-
NaCl	-	-	0.4628	-	-
HCl	0.1	-	-	-	0.1
NaOH	-	-	-	-	-
DMF	-	-	-	-	-
	9	10	11	12	13
Temperature (°C)	25	25	180	180	180

Pressure (kPa)	1351	101	1351	1351	1351
Massic flow (kg/h)	1000	864	4142	896	1000
Enthalpy (kJ/kgmol)	-290600	-290500	-326600	-263000	-278700
Composition (massic fraction)					
Água	0.7	0.5372	-	0.9	0.9589
1-butanol	-	-	1	-	-
Frutose	0.3	-	-	-	0.0411
Hmf	-	-	-	-	-
NaCl	-	0.4628	-	-	-
HCl	-	-	-	0.1	-
NaOH	-	-	-	-	-
DMF	-	-	-	-	-

	14	16	15	18	19
Temperature (°C)	180	180	180	180	37
Pressure (kPa)	1351	1351	1351	1351	1351
Massic flow (kg/h)	864	7392	489	7392	7392
Enthalpy (kJ/kgmol)	-260600	-291400	-274800	-277200	-294200
Composition (massic fraction)					
water	0.7901	0.3250	0.8825	0.3250	0.3250
1-butanol	-	0.5603	-	0.5603	0.5603
Fructose	-	0.0484	0.1174	0.0121	0.0121
Hmf	-	-	-	0.0363	0.0363
NaCl	0.2098	0.0541	-	0.0541	0.0541
HCl	-	0.0122	-	0.0218	0.0218
NaOH	-	-	-	0	0
DMF	-	0.00005	-	0	0

	22	29	30	25	24
Temperature (°C)	37	37	37	80	81
Pressure (kPa)	1351	1351	1351	50	50
Massic flow (kg/h)	7592	4876	2716	23575	489
Enthalpy (kJ/kgmol)	-296500	-311400		-240600	-282400
Composition (massic fraction)					
water	0.3353	0.0887	0.7781	0.7995	0.8822
1-butanol	0.5456	0.8444	0.0091	0.1876	-
Fructose	0.0118	0.0118	0.01168	-	0.1178
Hmf	0.0353	0.0549	-	0.01138	-
NaCl	0.0719	-	0.2011	-	-
HCl	-	-	-	-	-
NaOH	-	-	-	-	-
DMF	-	-	-	0.0015	-

	26	27	Organic phase	Aqueous phase	32

Temperature (°C)	74	71	36	36	71
Pressure (kPa)	50	50	50	50	50
Massic flow (kg/h)	78804	55229	59614	19189	55230
Enthalpy (kJ/kgmol)	-224500	-197800	-245800	-284100	-197800
Composition (massic fraction)					
water	0.2585	0.0275	0.0255	0.4822	0.02752
1-butanol	0.1716	0.1647	0.2217	0.01592	0.1647
Fructose	-	-	-	-	-
Hmf	0.00341	-	0.004517	-	-
NaCl	-	-	-	-	-
HCl	-	-	-	-	-
NaOH	-	-	-	-	-
DMF	0.5665	0.8077	0.7483	0.00177	0.8077

	33	34	35	38	39
Temperature (°C)	100	101	219	71	99
Pressure (kPa)	50	1650	1650	50	50
Massic flow (kg/h)	4384	4384	4384	290	4094
Enthalpy (kJ/kgmol)	-390900	-308800	-279700	-215100	-310900
Composition (massic fraction)					
water	-	-	-	-	-
1-butanol	0.9388	0.9388	0.9388	0.07891	0.9999
Fructose	-	-	-	-	-
Hmf	0.0611	0.0611	0.0611	-	-
NaCl	-	-	-	-	-
HCl	-	-	-	-	-
NaOH	-	-	-	-	-
DMF	-	-	-	0.9221	0.000086

	40
Temperature (°C)	-
Pressure (kPa)	0.9388
Massic flow (kg/h)	-
Enthalpy (kJ/kgmol)	0.0611
Composition (massic fraction)	
water	-
1-butanol	-
Fructose	-
Hmf	-
NaCl	-
HCl	0.9388
NaOH	-
DMF	0.0611

Table 5.

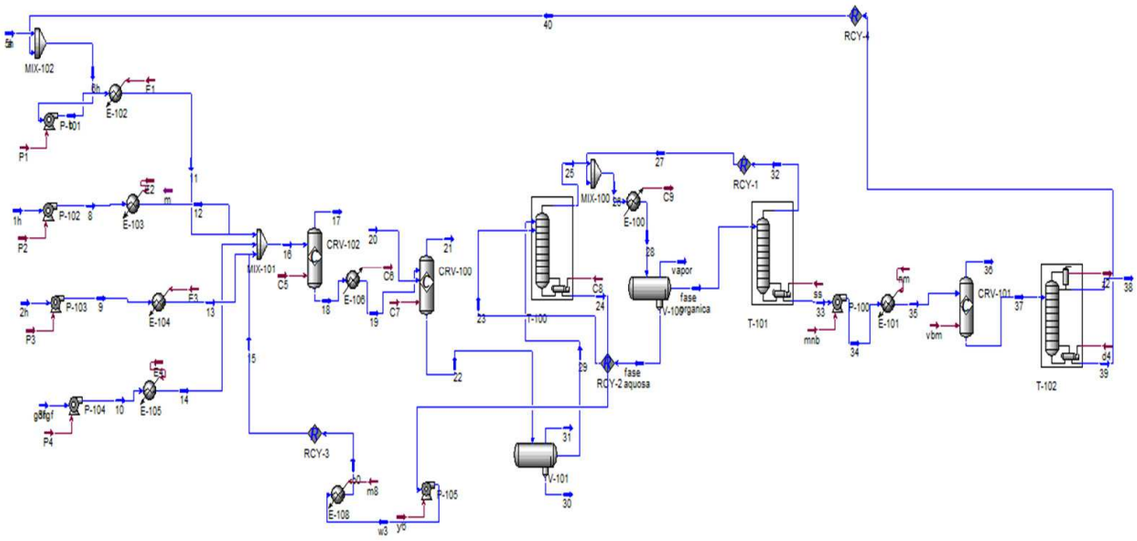

Fig. 1. Material and energy balance for each stream in DMF production plant.

4. Economic evaluation

The economic evaluation was based on the spreadsheets by Peters & Timmethaus (2003). The following steps were used by performed the economic analysis.

i. On the sheet '**Capital Inv**.' The estimated current total purchased cost of the equipament was entered. The results are showed in Table 7.
ii. On the sheet '**Materials & Labor**' the product prices and flowrates, the raw materials prices and flow rates, and the labor requirements were entered. The results are showed in Table 8.
iii. On the sheet '**Utilities**' the quantity of each utility needed annually was entered in appropriate units. The total annual utilities cost is transferred to sheet '**Annual TPC**';
iv. The '**Depreciation**' sheet is used only if the user wishes to change the default (5-year **Modified Accelerated Cost Recovery System (**MACRS) depreciation method);
v. On the '**Annual TPC**' sheet, all values were calculated from information available on other sheets. The Calculated annual TPC was transferred to '**Evaluation**'. The results are showed in Table 9.
vi. The sheet '**Evaluation**' used values from other sheets to calculate the common profitability measures. All calculations in 'Evaluation' are made in current (i.e. inflated) dollars.

Each piece of equipment was roughly sized from material and energy balance and the approximate cost determined. Costs of equipment operating at ambient pressure and using carbon steel, were estimated by Eq. (1) (Turton et al., 2003).

$$\log Cp^{o} = K_1 + K_2 \log(A) + K_3 (\log(A))^2 \quad (1)$$

Where A is the equipmen t capacity or size parameter and K_1, K_2 and K_3 are the parameters (Turton et al., 2003). The effect of time, operating conditions and material construction on

Equipment number	equipment	Parameter equipment	Equipment cost ($), CEPCI = 499,6
P-101	pump	flow: 4.97 m^3/h	3814
P-102	pump	flow: 0.92 m^3/h	2910
P-103	pump	flow 0.864 m^3/h	2898
P-104	pump	flow: 0.63 m^3/h	2845
P-105	pump	flow: 0.54 m^3/h	2823
P-100	pump	Flow: 5.27 m^3/h	4670
E-102	heater	Heaty duty: 302, 5 KW	64862
E-103	heater	Heaty duty: 160 KW	42107
E-104	heater	Heaty duty: 134 KW	37333
E-105	heater	Heaty duty: 107 KW	320119
E-106	heater	Heaty duty: 8790 KW	637790
E-108	heater	Heaty duty: 100 KW	30610
E-100	cooler	Water flow: 198 m^3/h	11421
E-101	heater	Heaty duty:467 KW	87085
CRV-102	reactor	Heaty duty: 10000 KW	2917722
CRV-100	reactor	Heaty duty: 344,75 KW	22354
CRV-101	reactor	Heaty duty: 10000 KW	2917722
T-100	stripping colunn	Height: 4 m; diameter: 1m	15003
T-101	stripping colunn	Height: 4 m; diameter: 1m	15003
T-102	destilation colunn	Height: 4 m; diameter: 1m	15003
Total			**1609365**

Table 6. Equipment parameter

	Fraction of delivered equipment			% chosed (B)	Calculated values, million ($)
	Solid processing plant (A)	Solid fluid processing plant (B)	Fluid processing plant (C)		
Cost directs					
Purchased equipment, E′					1.609
Delivery, fraction of E′	0.10	0.10	0.10	0.10	0.1604
Purchased equipment instalation	0.45	0.39	0.47	0.39	0.6903
Instrumentation & controls (installed)	0.18	0.26	0.36	0.26	0.460
Piping (installed)	0.16	0.31	0.68	0.31	0.548
Eletrical systems (installed)	0.10	0.10	0.11	0.10	0.177

	Fraction of delivered equipment			% chosed (B)	Calculated values, million ($)
	Solid processing plant (A)	Solid fluid processing plant (B)	Fluid processing plant (C)		
Buildings (incluing services)	0.25	0.29	0.18	0.29	0.513
Yard improvements	0.15	0.12	0.10	0.12	0.212
Service facilities (installed)	0.40	0.55	0.70	0.55	0.973
Total direct costs					5.345
Indirect costs					
Engineering and supervision	0.33	0.32	0.33	0.32	0.566
Construction expenses	0.39	0.34	0.41	0.34	0.602
Legal expenses	0.04	0.04	0.04	0.04	0.071
Contractor's fee	017	0.19	0.22	0.19	0.336
contigency	0.35	0.37	0.44	0.37	0.655
Total indirect costs					2.23
Fixed capital investimento					7.575
Working capital	0.70	0.75	0.89	0.75	1.327
Total capital investment					8.903

Table 7. Estimation of capital investment by percentage of delivered equipment method

Material	classification	Price (US$/kg)	Annual amount (million kg/year)	Annual value (million US$/year)
DMF	Product	variable	2.217	0.88
Fructose	Raw material	0.78 (variable)	2.484	1.94(62%)
NaCl	Raw material	0.015	0.05	0.0007(0.02%)
HCl	Raw material	0.295	0.745	0.22(7.7%)
1-butanol	Raw material	1.72	0.431	0.7906(23%)
water	Raw material	0.08	16.312	1.30(2.6%)
NaOH	Raw material	0.10	25	2.5(2.7%)
H_2	Raw material	10	0.13834	1.3834(1.4%)

Table 8. Annual raw material costs and products values

Item (A)	Factor (B)	Basis (C)	Basis Cost (million) US$/year (D)	Cost (milion) US$/year (E)
1. Raw materials				4.204
2. operating labor (M)				0.885
3. operating supervision	0.15	de (2)	0.885	0.133
4. utilities				0.55
5. maintenance and repairs (MR)	0.06	de FCI	1.407	0.46
6. operating supplies	0.15	de (5)	0.084	0.07
7. laboratory charges	0.15	de (2)	0.885	0.133
8. Royalties	0.01	de c_o	3.090	0.08
9. catalysts and solvents	0			2.5
Variable cost				6.536
10. taxes (property)	0.02	de FCI	1.407	0.156
11. financing (interest)	0	de FCI	1.407	0
12. insurance	0.01	de FCI	1.407	0.014
13. rent	0		1.407	0.078
14. depreciation	Calculated separately			
C				0.233
15. plant overhead, general	0.6		1.102	0.891
16. administration				0.661
17. manufacturing cost				7.660
18. administration	0.2	de (2), (5)	1.102	0.297
19. distribution & selling	0.05	de c_o	3.090	0.437
20. Research & development	0.04	de c_o	3.090	0.350
General expense				0.469
Total product cost without depreciation = c_o				8.744

Table 9. Annual total product cost at 100 % capacity

purchased equipment cost was corrected by time factor (I), material factor (F_M) and conditions factor (F_P). Purchased equipment cost is then expressed by:

$$Cp = Cp^0 \times F_M \times F_P \times I \quad (2)$$

In this work, inflation was account ed for by the Chemical Engineering Plant Cost Index (Lozowski, 2010). According the Table 8 the price of raw material and solvent are the more expensive.

With chemical and utility cost were obtained and a discounted cash flow analysis was performed to determine profitability. The quantities of chemical material, utilities and production of DMF were doubled, tripled, etc, from the simulated plant, to achieve sale price and cost DMF similar to gasoline and ethanol. However, the equipment cost increased according to Eq. (3). For all sale price and cost DMF from Tables 5, 6 e 7 the profitability measures were: 15.0 %/year (return on investment) and a 3.6 year payback period.

The conversion and the price fructose were changed too. The tables 10, 11 and 12 show the results.

	Conversion (75%)	Conversion (80%)	Conversion (85%)
Fructose price, 0.78 US$/kg	6.00/3.94	5.90/3.83	5.80/3.75
Fructose price, 0.50 US$/kg	5.70/3.59	5.60/3.49	5.40/3.42
Fructose price, 0.10 US$/kg	5.20/3.10	5.00/3.00	4.90/2.94

Table 10. Sale price of DMF/cost (US $/kg) of DMF to several conversions in reactor CRV-102 and various prices of fructose (standard plan used in the simulation).

	Conversion (75%)	Conversion (80%)	Conversion (85%)
Fructose price, 0.78 US$/kg	3.70/2.68	3.60/2.59	3.52/2.54
Fructose price, 0.50 US$/kg	3.30/2.33	3.20/2.26	3.13/2.22
Fructose price, 0.10 US$/kg	2.70/1.83	2.63/1.78	2.58/1.74

Table 11. Sale price of DMF/cost (US $/kg) of DMF to several conversions in reactor CRV-102 and various prices of fructose (scale factor 12).

	Conversion (75%)	Conversion (80%)	Conversion (85%)
Fructose price, 0.78 US$/kg	2.68/1.95	2.60/1.89	2.55/1.85
Fructose price, 0.50 US$/kg	2.27/1.60	2.20/1.56	2.15/1.52
Fructose price, 0.10 US$/kg	1.68/1.10	1.63/1.07	1.60/1.05

Table 12. Sale price of DMF/cost (US $/kg) of DMF to several conversions in reactor CRV-102 and various prices of fructose (scale factor 30).

In table 12 observes that the sale price of DMF can be compared with the gasoline. The cost of DMF decreases with the increase of the conversion of fructose to HMF and with the price decrease of fructose.

$$\text{Equipament cost} = N^{0.6} \tag{3}$$

Where N is the scale factor with values of N = 2, 5, 10, etc.

Thus, the estimated cost of the equipment was U.S. $ 12 million, fixed capital investment was U.S. $58 million, direct cost were U.S. $41 million, indirect costs were U.S. $17 million, working capital was U.S. $10 million and total capital investment was U.S. $68 million. From economic evaluation the value and cost DMF was 2.68 U.S. $/kg and 1.95 U.S $/kg, respectively. For this analysis, the plant is economically feasible for a scale factor of thirty (N= 30).

5. Conclusions

The following conclusions can be drawn from the facts presented in the above review. In the thermodynamic analysis salt is considered a solute, so it´s possible to use the model UNIQUAC (Mock et al., 1986). The estimation of binary interaction parameters for UNIQUAC in the system water-butanol-salt was carried out with Fortran software from liquid-liquid equilibrium data and UNIFAC (UNIQUAC Functional-group Activity Coefficient) method was used to estimate remain parameters. The separation system (composed by two stripping columns, one cooler and one settling tank) used to separate 1-butanol and water recovery 98% of 1-butanol. The separation system (composed by distillation column) used to separate DMF recovery 92 % of DMF. Economic evaluation showed that a suitable operational plant could work with 12.4 tons/year of fructose. It could produce 11.1 tons/year of DMF. The fixed capital investment in plant and equipment is estimated at U.S. $ 58 million and U.S. $ 12 million, respectively. The DMF value was 2.69 U.$. $/kg. For this analysis, the plant is economically feasible, from comparison with a reference market of 15.0 %/year (return on investment) with a 3.6 year payback period. This analysis suggests that DMF production from fructose deserves serious consideration by investors.

6. References

Abrams, D.S. & Prausnitz, J.M. (1975). Statistical Thermodynamics of Liquid Mixtures: A New Expression for the Excess Gibbs Energy of Partly or Completeley Miscible Systems. *American Institute of Chemical Engineers Journal*, Vol.21, pp. 116-128.

Allen, D.H. (1980). *A Guide to Economic Evaluation of Projects*, The Institutions Chemical Engineers, Rugby, United Kingston.

Aznar, M. (1996). *Equilíbrio Líquido-Vapor de Sistemas com Eletrólitos Via Contribuição de Grupo,* Universidade Federal do Rio de Janeiro, Rio de Janeiro, Brazil.

Catté, M.; Dussap, C.G.; Achard, C. & Gros, J.B. (1994). Excess Properties and Solid-Liquid Equilibria for Aqueous Solutions of Sugars Using a UNIQUAC Model. *Fluid Phase Equilibria*, Vol.96, pp. 33-50.

Cezário, G. L.; M. Filho, R. & Mariano, A. P. (2010). Projeto e Avaliação Energética do Sistema de Destilação de uma Planta de Fermentação Extrativa para a Produção de Biobutanol, *Proceedings of XVII Congresso de Iniciação Científica da Universidade Estadual de Campinas*, Campinas, Brazil.

Debye, P. & Huckel, E. (1923). Zur Theorie der Elektrolyte. *Physics Zeitsch*, Vol.24, pp. 185-206.

Festel, G. W. (2008). Biofuels - Economic Aspects. *Chemical Engineering Technology*, Vol.31, pp. 715-720.

Fowler, R.H. & Guggenheim, E.A. (1949). *Statistical Thermodynamics,* Cambridge University Press, Cambridge.

Fredenslund, A.A.; Gmehling, J. & Rasmussen, P. (1977). *Vapor-Liquid Using UNIFAC*, Elsevier, Amsterdam.

Leshkov, Y.R.; Barrett, C. J.; Liu, Z.Y. & Dumesic, J.A. (2007). Production of Dimethylfuran for Liquid Fuels from Biomass-Derived Carbohydrates. *Nature*, Vol.447, pp. 982-986.

Lozowski, D. (2010). Economic Indicators. *Chemical Engineering*, Vol.117, pp. 55.

Mock, B.; Evans, L.B. & Chen, C.C. (1986). Thermodynamic Representation of Phase Equilibria of Mixed-Solvent Electrolyte Systems. *Association International of Chemical Engineers Journal*, Vol.32, pp. 1655-1664.

Peters, M.S.; Timmerhaus, K.D. & West, R.E.W. (2003), *Plant Design and Economics for Chemical Engineers*, McGraw-Hill, New York.

Pitzer, K.S. (1973). Thermodynamics of Electrolytes I. Theoretical Basis and General Equation. *Journal Physics Chemical*, Vol.77, pp. 268-277.

Qureshi, N.; Hughes, S.; Maddon, I.S. & Cotta, M.A. (2005). Energy-Efficient Recovery of Butanol from Model Solutions and Fermentation Broth by Adsorption. *Bioprocess and Biosystems Engineering*, Vol.27, pp. 215-222.

Renon, H. & Prausnitz, J. M. (1968). Local Compositions in Thermodynamics Excess Functions for Liquid Mixtures. *American Institute of Chemical Engineers Journal*, Vol.14, pp. 135-144.

Turton, R.; Bailie, R.C.; Whiting, W.B. & Shauwitz, J.A. (2003), *Analysis, Synthesis, and Design of Chemical Processes,* Prentice Hall, New Jersey.

Santis, R.; Marrelli, L. & Muscetta, P.N. (1976a). Liquid-Liquid Equilibria in Water-Aliphatic Alcohol Systems in the Presence of Sodium Chloride. *Chemical Engineering Journal*, Vol.11, pp. 207-214.

Santis, R.; Marrelli, L. & Muscetta, P.N. (1976b). Influence of Temperature on the Liquid-Liquid Equilibrium of the Water-n Butyl Alcohol-Sodium Chloride System. *Journal of Chemical and Engineering Data*, Vol.21, pp. 324-327.

Schaub, G. & Vetter, A. (2003). Biofuels for Automobiles - An Overview. *Chemical Engineering Technology*, Vol.31, pp. 721-729.

UNISim Honeywell (2007), http://www.honeywell.com.

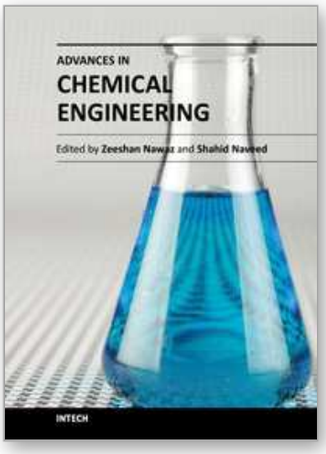

Advances in Chemical Engineering

Edited by Dr Zeeshan Nawaz

ISBN 978-953-51-0392-9
Hard cover, 584 pages
Publisher InTech
Published online 23, March, 2012
Published in print edition March, 2012

Chemical engineering applications have been a source of challenging optimization problems in terms of economics and technology. The goal of this book is to enable the reader to get instant information on fundamentals and advancements in chemical engineering. This book addresses ongoing evolutions of chemical engineering and provides overview to the sate of the art advancements. Molecular perspective is increasingly important in the refinement of kinetic and thermodynamic molding. As a result, much of the material was revised on industrial problems and their sophisticated solutions from known scientists around the world. These issues were divided in to two sections, fundamental advances and catalysis and reaction engineering. A distinct feature of this text continues to be the emphasis on molecular chemistry, reaction engineering and modeling to achieve rational and robust industrial design. Our perspective is that this background must be made available to undergraduate, graduate and professionals in an integrated manner.

How to reference

In order to correctly reference this scholarly work, feel free to copy and paste the following:

Fábio de Ávila Rodrigues and Reginaldo Guirardello (2012). Techno-Economic Evaluation of Large Scale 2.5-Dimethylfuran Production from Fructose, Advances in Chemical Engineering, Dr Zeeshan Nawaz (Ed.), ISBN: 978-953-51-0392-9, InTech, Available from: http://www.intechopen.com/books/advances-in-chemical-engineering/economic-evaluation-of-large-scale-2-5-dimethylfuran-production-from-fructose

INTECH
open science | open minds

InTech Europe
University Campus STeP Ri
Slavka Krautzeka 83/A
51000 Rijeka, Croatia
Phone: +385 (51) 770 447
Fax: +385 (51) 686 166
www.intechopen.com

InTech China
Unit 405, Office Block, Hotel Equatorial Shanghai
No.65, Yan An Road (West), Shanghai, 200040, China
中国上海市延安西路65号上海国际贵都大饭店办公楼405单元
Phone: +86-21-62489820
Fax: +86-21-62489821

© 2012 The Author(s). Licensee IntechOpen. This is an open access article distributed under the terms of the Creative Commons Attribution 3.0 License, which permits unrestricted use, distribution, and reproduction in any medium, provided the original work is properly cited.