Chapter 8

Analysis on High Temperature Gasification for Conversion of RDF into Bio-Methanol

Annarita Salladini, Emanuela Agostini,
Alessia Borgogna, Luca Spadacini,
Maria Cristina Annesini and Gaetano Iaquaniello

Additional information is available at the end of the chapter

http://dx.doi.org/10.5772/intechopen.74218

Abstract

Municipal solid waste (MSW) is one of the residue materials considered as a potential source for biofuel production in the EU Renewable Energy Directive (RED), which establishes that a minimum of 10% biofuels for transport shall be used in every Member State by 2020, thus promoting advanced biofuel from waste. A high-temperature gasification technology transforms MSW into a syngas rich in hydrogen and carbon monoxide and free of tar, char and harmful compounds like dioxins appearing as a promising root for methanol production. The overall process including MSW high-temperature gasification, syngas purification and conditioning up to methanol synthesis has been modeled with Aspen Plus analyzing the influence of waste composition and operating conditions on syngas composition and methanol yield. The evaluation of CAPEX and OPEX has been carried out to obtain a cost of production (COP) estimation. The greenhouse gas (GHG) emission has also been estimated and compared with the conventional waste incineration process and methanol production. The technology assessment shows interesting results technically and economically, when compared with waste to energy processes: over 50% of incoming carbon is fixed into methanol molecule, and due to the negative cost paid for RDF disposal, the bio-methanol COP provides a reasonable industrial margin.

Keywords: gasification, RDF, waste, biofuel, bio-methanol, aspen plus

1. Introduction

Municipal solid waste (MSW) disposal is a critical issue that all the cities have to tackle. Typical Italian municipal solid waste management includes landfill 26%, recycling 26%, biological

organic treatment 18%, incineration 19%, co-combustion 2%, mechanical and biological treatment 3%, exportation 1% and other 5% [1]. To limit the waste environmental impact, European legislations promote a hierarchy of actions for waste practices and treatments: the 4Rs of sustainability, in the order, reduce, reuse, recycle and recover [2]. According to this approach, landfill must be the last choice for waste disposal, also due to the landfill gas production with a high content of methane, which is considered a greenhouse gas (GHG) that is 25 times more dangerous than CO_2 [3]. Nowadays, mostly incineration is adopted as a waste treatment, since it has the benefit to reduce 80–90% of the waste volume and avoids sanitary issue related to waste putrefaction [4]. However, the incineration treatment leads to environmental issues regarding pollutions, high GHG emission and toxic substance formation. On the other hand, only a partial energy or thermal recovery could be achieved from incineration. Therefore, in a scenario where GHG and dioxin production is the main topic, incineration is not the proper solution for this issue. Under this prospective, a thermal conversion treatment, such as gasification, is suggested as a reliable Waste to Energy (WtE) process to produce steam and energy, avoiding any toxic substances formation. Gasification, widely reviewed by Arena [5], in contrast with incineration, provides the collection of ashes in an inert vitrified form and lowers pollutants emission and simpler combustion control, even though the thermal efficiency is comparable for both processes [6].

A further step is to move from the Waste to Energy process toward Waste to Chemicals (WtC) process, that is a process where syngas is not burnt, but used for chemical production purposes, complying as a good example of circular economy; some waste to chemical processes have been analyzed in engineering and economic terms [7, 8]. The chemical production occurring through gasification includes WtE process benefits of high-temperature destruction on pollutions formation. Moreover, the main advantage of WtC is that, in this process, the high carbon content of MSW, near to 50%, can be partially fixed in the molecule of the product and not all emitted as CO_2; this leads to consider MSW as a renewable carbon feedstock for chemical production. The MSW use as a potential source for biofuel production is promoted in the EU Renewable Energy Directive (2009/28/EC) [9]. In fact, within 2020, each Member State will have to achieve the target of 10% advanced biofuel used for transportation and double-counting biofuel produced from second-generation biomass, like waste. In this way, MSW turns from waste to a valuable resource able to compete with first biomass generation, whose production is becoming more and more controversial due to 'food competition' and intensive land use [10].

Generally, WtE or WtC processes require a first step to convert MSW into a higher calorific material named refused-derived fuel (RDF), whose lower heating value (LHV) is approximately equal to a classic fuel one. The MSW conversion to RDF is achieved with a mechanical-biological treatment that involves a preliminary sorting to separate the organic from the inorganic part, a magnetic separation to remove metals and a final shredding to get from rough to fine RDF, gathered with trommels and hammer mills. To convert RDF into energy or chemicals, a preliminary step involving its transformation into a combustible gas (syngas), rich in hydrogen and carbon monoxide, is required. This step is achieved, thanks to the gasification process itself: a thermochemical conversion of solid fuel by reaction with a controlled amount of oxidant agent. There are several currently gasification unit configurations, mainly obtained by varying the

reactor design or operating conditions such as temperature, pressure and the type of oxidant agent [5]. The choice related on gasification configuration and downstream scheme process strictly depends on the results of economic optimization and the required syngas composition for its forward use. Nowadays, gasification process in a WtC or WtE prospective is provided, for example, by Enerkem, a Canadian company specialized in a waste to fuel business (methanol, ethanol and green chemicals), which obtains syngas through a fluidized bed gasifier with air as the oxidant agent [11]. A different type of gasifier should be used, according to Energy Recovery System Ltd., for ammonia and urea production. The Thermoselect technology, a gasifier that works at high temperature with pure oxygen, is employed in the ammonia synthesis [12].

As mentioned before, the process scheme will be diversified according to the final product to achieve. Particularly, the methanol synthesis involves the following catalytic reactions:

$$CO + 2H_2 \rightleftarrows CH_3OH, \quad \Delta H(298\ K) = -90.7\ kJ/mol$$

$$CO_2 + 3\ H_2 \rightleftarrows CH_3OH + H_2O, \quad \Delta H(298\ K) = -49.8\ kJ/mol$$

$$CO_2 + H_2 \rightleftarrows CO + H_2O, \quad \Delta H(298\ K) = +40.9\ kJ/mol$$

Only two of this group of reactions are linearly independent. Accordingly, to the reaction stoichiometry, the number of hydrogen and carbon monoxide or of hydrogen and carbon dioxide combining to methanol is in the ratio of 2:1 and 3:1, respectively. Therefore, the stoichiometric value of the ratio

$$MM = \frac{H_2 - CO_2}{CO + CO_2}$$

named methanol module (MM) [13] is 2; generally, a value of MM just above it (about 2–2.4) is recommended in the industrial plant. Even the CO and CO_2 contents will influence the product distribution in the methanol synthesis; particularly, a syngas with a low CO_2 and a high CO content is more selective on methanol production than on water, but in the meantime, it will lead to an increased synthesis reactor outlet temperature due to the exothermicity of the methanol synthesis (reactions (1) and (2)); on the other hand, a high reactive feed (with a high CO content) may have a positive effect on the reactor sizing. A compromise, in an industrial plant, has been made by using a carbon ratio, CO_2/(CO + CO2), between 0.2 and 0.5 [14].

According to the reaction scheme reported earlier, a high CO_2 content negatively affects the methanol yield (referred to the hydrogen consumption) by promoting reaction (2); furthermore, this reaction produces water that promotes catalyst deactivation. Therefore, a carbon dioxide content and a water content less than 12 and 0.5%, respectively, are recommended at the inlet synthesis reactor. The main parameters required for methanol synthesis are shown in **Table 1**.

Finally, the gas fed to the synthesis reactor must be free from some contaminants like HCl, H_2S, COS and metals to preserve catalyst from deactivation.

For all these reasons, a deep purification and a conditioning step are needed, before methanol synthesis, in order to reach the mentioned requirements.

	Syngas from the gasifier	Requirements for methanol synthesis
Methanol module	0.41–0.54	2.1
$\frac{CO_2}{CO+CO_2}$	0.19–0.27	0.2–0.5
$\%CO_2$	9–14%	<12%
$\%H_2O$	5–6%	<0.5%

Table 1. Starting parameters describing syngas suitability for methanol synthesis, considering an RDF lower heating value between 14 and 18 MJ/kg, compared with required parameters.

In this work, a customized model developed within Aspen Plus environment is used to analyze the methanol production process from RDF, including RDF gasification, cleaning and purification, conditioning up to methanol synthesis and purification. The overall process has been also analyzed in terms of greenhouse gas emission and economic feasibility.

2. Process and model description

2.1. Process description

The proposed waste-to-methanol process is based on the following main steps, as shown in the block diagram depicted in **Figure 1**: RDF gasification and syngas cleaning, syngas purification, syngas conditioning, methanol synthesis and recovery. Gasification and cleaning steps are strictly connected and constitute a unique block. The core of this section is the gasifier: a high-temperature melting reactor able to convert the combustible fraction of RDF into syngas and in the meantime to transform the glassy and mineral waste components into an inert slag. At this scope, a proper temperature profile is required along the reactor, schematically represented in **Figure 2**. On the bottom, where the inert oxides are melted and then discharged, the temperature is maintained near to 2000°C due to the exothermic combustion reaction of RDF, obtained with the injection of a controlled amount of pure oxygen (gasifying agent) and methane. Pure oxygen is used for gasification step in order to ensure a higher syngas heating value and a lack of inert compound in the synthesis step. A temperature of about 1100°C is also maintained at the top of the reactor, in order to avoid the formation of pollutant compounds, such as dioxins, in the produced syngas [15]. The hot raw syngas, leaving the gasifier, is abruptly cooled in a quench settler, from 1100 to 90°C, freezing the gas composition and

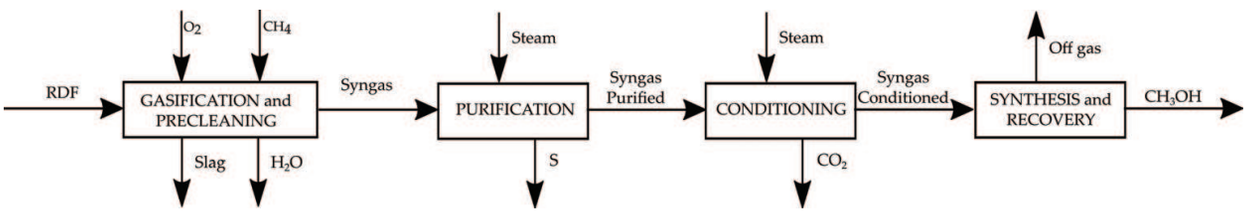

Figure 1. A block scheme of overall process.

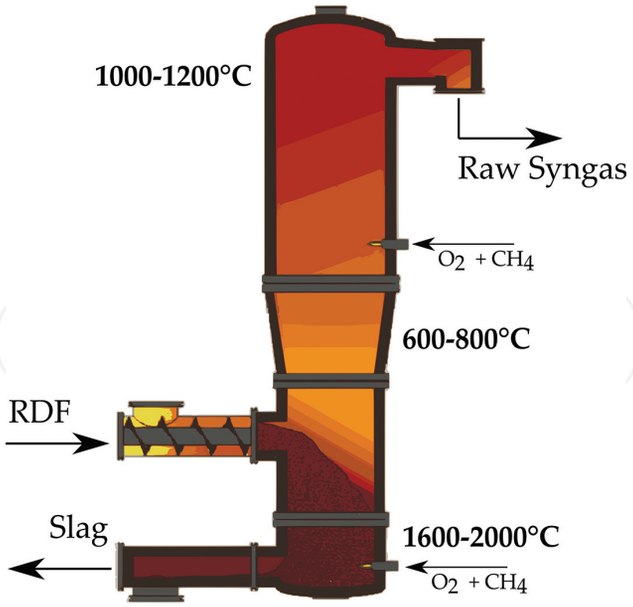

Figure 2. High-temperature melting gasifier.

avoiding dioxins formation. The syngas, properly cooled and coarsely cleaned from coarser combustion residues and powders, is then sent to two scrubbers built in series. The first one is an acid scrubber and the second one is an alkaline scrubber. At the end of this path, the syngas has been cleaned from thinner dust compound and from contaminants, particularly metals (Hg, Zn, Ti), ammonia and sulfur compounds. Before the subsequent steps, a part of the precleaned syngas is stocked in a gasometer in order to smooth the flow rate fluctuations, caused by the nonhomogeneous conditions set in the gasifier. The reactor works at a slightly higher atmospheric pressure in order to avoid any air entrance.

Despite the presence of preliminary cleaning in the gasification unit, the contaminants level, is still too high to use the syngas for methanol synthesis, especially in terms of H_2S and COS contents. For this reason, a deep purification step is required before the conditioning section. Firstly, COS is converted into H_2S, thanks to the hydrolysis reaction [16], carried out with medium pressure steam:

$$COS + H_2O \rightleftarrows H_2S + CO_2$$

Once the COS is converted, the overall H_2S content is removed by its conversion into solid elemental sulfur, by a catalytic oxidation system, named Lo-Cat. This particular system is composed of three sections that include an absorber, an oxidizer, for catalyst regeneration, and a sulfur-handling unit. In particular, when the gas stream enters in contact with the Lo-Cat solution in the absorber, the H_2S is converted into elementary sulfur; the latter leaves the absorber and enters the oxidizer, where the catalyst is regenerated by contact with the oxygen in air and the elemental sulfur is concentrated into slurry sulfur. Finally, the sulfur is washed to recover any entrained catalyst and converted in a solid form. In this way, a H_2S content down to 0.3 ppm is achieved [17]. To ensure ppb levels of H_2S, a polishing step is required by using an absorbent ZnO bed, which reacts with the remaining H_2S.

$$ZnO + H_2S \rightleftarrows ZnS + H_2O$$

All these treatments allow to reduce the sulfur content to ppb level, avoiding any detrimental effects for the downstream catalyst section.

The syngas compositions are mainly dependent on the lower heating value of the available solid waste, as widely discussed in Section 3. In any case, as shown in **Table 1**, the initial MM is too low to be suitable for methanol synthesis, due to the high amount of carbon present in the feedstock. To improve the MM ratio, hydrogen has to be added by using an external source or by converting the CO content present in the syngas via a water gas shift reaction:

$$CO + H_2O \rightleftarrows CO_2 + H_2$$

It is important to recognize that the shift reaction itself does not enhance the MM: in fact, this reaction converts CO in an equimolar mixture of H_2 and CO_2; therefore, a CO_2 removal unit is required to reach the right MM.

In the proposed process scheme, the conditioning is firstly carried out on a high-temperature shift reactor, operating with a steam/dry-syngas ratio equal to 1.5 and a CO_2 removal unit (amine scrubber), to remove the CO_2 produced by the shift reaction. To optimize the process scheme, only a fraction of the syngas from the gasifier is sent to the shift reactor, while the remaining fraction bypasses this step and is directly sent to the methanol synthesis reactor (see **Figure 3**). As a result, a MM value near 1.7 is achieved with this conditioning configuration. A further increase in the hydrogen content, up to a MM equal to 2.1, is achieved by adding a pure hydrogen stream to the stream entering the methanol synthesis reactor.

Methanol synthesis is carried out in an adiabatic catalytic reactor, operating at 55 barg. Due to the low one-pass conversion of syngas to methanol, a recycle loop is necessary. In detail, a portion of the recycle stream is sent to a Pressure Swing Adsorption (PSA) unit, where 85% of H_2 content is recovered in a pure hydrogen stream while CO and CO_2 are removed with the off-gas; the pure hydrogen stream is used to increase the MM to the reactor.

Raw methanol is finally recovered by condensation and purified via distillation up to fuel-grade methanol.

2.2. Process modeling

A steady-state simulation has been developed to describe the overall process of RDF conversion into methanol. The model, using Aspen Plus simulator [18], is divided into two main sections: the first one including the gasification and precleaning units, and the second one including the syngas conditioning and the methanol synthesis.

2.2.1. Gasification and precleaning unit

Waste, like biomass and coal, is a heterogeneous solid material that requires a specific step of characterization to be correctly represented in the simulation environment. RDF has been

introduced as a *non-conventional component* defining its elemental composition, moisture and ash contents and its calorific value. From these parameters, waste physical properties are estimated with HCOALGEN and DCOALIGT property methods. Even if these two methods have been developed to reproduce, respectively, the enthalpy of formation and the density of coal [19], they are able to fit well also the same properties of biomass and waste [20–22]. Meanwhile, IDEAL thermodynamic method has been used for physical properties of conventional components. Although ash is supposed to be inert in the gasification reactions, its content has been deeply characterized. In order to obtain a better definition of the heat amount required for melting process, ash composition has been modeled as a solid mixture composed by SiO_2, CaO, Al_2O_3 and Fe_2O_3, according to available experimental data from Malagrotta facilities. On composition basis, specific heat and enthalpy connected to melting process of the inert mixture have been estimated with the method proposed by Mills [23].

As first approach, already validated with experimental results, the attainment of thermodynamic equilibrium condition in the gasifier has been hypothesized, and a zero-dimensional and kinetic-free model has been developed. Four Aspen reactor blocks have been employed to model the complex gasifier behavior and the temperature profile, as shown in **Figure 3**. The RYIELD is required to simulate the waste decomposition. This block directly converts the non-conventional component (waste) into conventional elements (C, N, H, S, O, Cl, H_2O and ash mixture), without any kinetics or stoichiometric constrain but only defining mass yields according to ultimate analysis of waste. The enthalpy variation between the input and the output streams of this block just represents the heat required for bond-breaking step.

The gasifier itself is modeled as three Gibbs reactors, operating at different temperatures as follows:

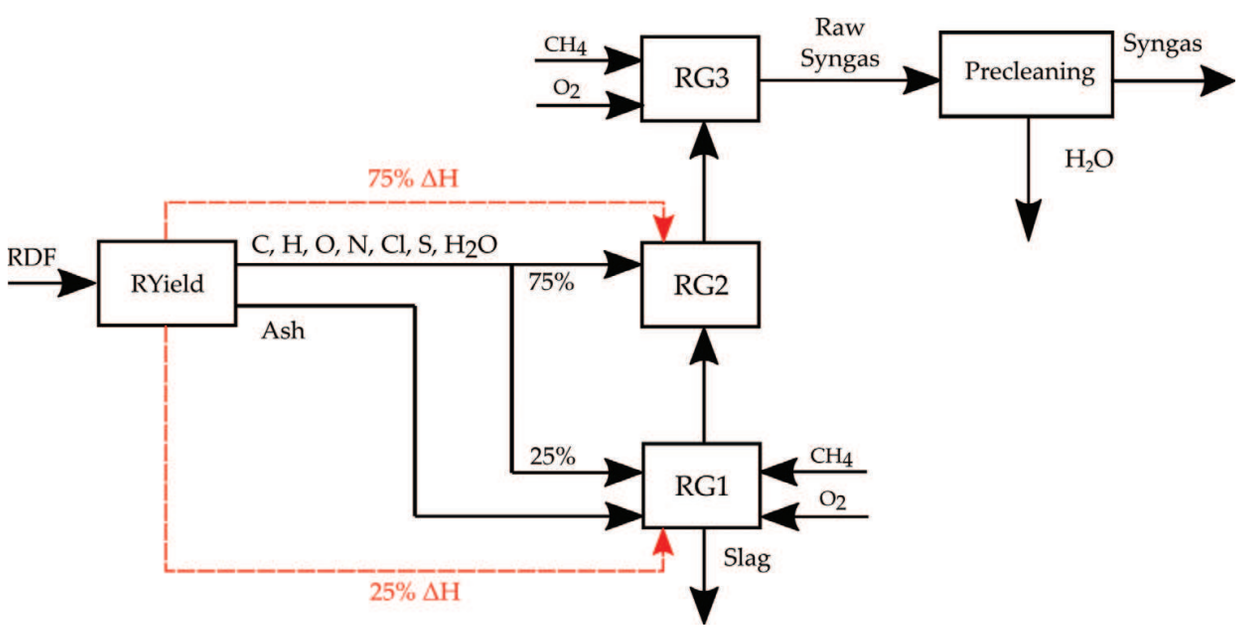

Figure 3. A block scheme reproducing gasification and cleaning unit in Aspen Plus environment.

- Melting zone RG1, where mainly heterogeneous combustion reactions and melting process occur at almost 2000°C; in this region, a fixed methane flow rate (as auxiliary fuel) is added, while the temperature is regulated with the introduction of a controlled amount of oxygen.
- Gasification zone RG2, where the oxygen amount decreases and a reduction atmosphere has been established; thus principally gasification reactions occur.
- Stabilization zone RG3, where a fresh amount of oxygen and methane, with a specified mass ratio, is introduced to raise the temperature near to 1100°C in order to enhance methane and tar decomposition and avoid dioxin formation.

The heat produced in the RYIELD reactor is proportionally added to RG1 and RG2 (as depicted in **Figure 3** with dashed red lines) in order to take into account all contributions for the right formulation of energy balance.

From the third Gibbs reactor, a hot raw syngas stream is obtained, which is suddenly cooled in quench equipment, modeled by a flash block. In a simplified way, also the acid and alkaline scrubbers have been simulated with flash blocks, neglecting the pH and composition variation, but mainly taking into account the decrease in water content in the syngas mixture.

2.2.2. Purification unit

The purification section is modeled using component separator, equilibrium and Gibbs reactor blocks of Aspen Plus simulator. The syngas obtained after the precleaning step is sent to a compression section to raise the pressure till 15 barg. To avoid deactivation of the catalyst used in the methanol synthesis reactor, a purification unit is necessary to decrease sulfur to ppb level (**Figure 4**). This purification unit is composed of the following:

1. Hydrolysis Gibbs reactor R-HYDRO is an adiabatic reactor where the hydrolysis reaction IV occurs, to convert COS to H_2S. Syngas and medium pressure steam are fed to this reactor, with a flow rate ratio depending on the COS content and set by a controller; a control is also placed to set the steam pressure in order to obtain an inlet gas temperature of 180°C, thanks to heat recovery.
2. Sulfur removal LO-CAT, modeled with a component separator, where 99.9% of H_2S is removed, according to the technical specifications provided by the vendor [17].
3. Sulfur-polishing step ZNO-BED, operating at 200°C, where 99.7% of residual H2S and 80% of residual COS are removed.

With all these units, a sulfur ppb level is obtained, so the syngas could be properly conditioned, avoiding any catalyst deactivation.

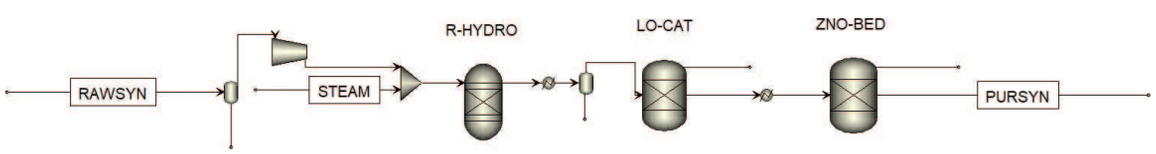

Figure 4. Syngas purification scheme.

2.2.3. Conditioning unit

As previously reported, in order to achieve a methanol module suitable for methanol synthesis, a portion of the purified syngas is sent to a shift reactor and a subsequent unit to remove carbon dioxide (**Figure 5**).

Simulation of this block in Aspen Plus is carried out with a split unit that separate the syngas stream sent to the shift reactor; a controller is used to define the flow rate of this stream, depending on the composition of the syngas, which in turn depends on the fluctuation of RDF composition. Superheated medium pressure steam is added to the split syngas; another controller is placed to define the right amount of steam that has to be added in order to respect a steam/dry-syngas molar ratio equal to 1.5 [24]. The inlet R-HTS temperature is 320°C, in order to activate the Fe/Cr/Al2O_3 catalyst. The R-HTS is an equilibrium reactor where the shift reaction is imposed. A CO_2 removal unit follows R-HTS to separate the carbon dioxide formed by reaction VI and thus increasing the MM value. The CO_2 REMOVAL is a component separator where a 95% of CO_2 removal is set. In detail, this separation consists of an amine (MDEA) unit absorber and a regenerator, with heat process recovery for the regeneration section, providing a pure CO_2 gas stream [25]. After this treatment, the conditioned syngas is reconnected to the split ones, reaching an MM value of 1.7.

2.2.4. Synthesis and recovery unit

The syngas is then compressed to be suitable for methanol synthesis till 56 barg. When methanol synthesis occurs, low methanol conversion is obtained, so to increase this, a recycle loop is required to circulate the unreacted reagents at the reactor entrance. In order to reach an MM equal to 2.1, part of the recycled stream is sent to the Pressure Swing Absorption system, modeled with a component separator where the 85% of H_2 recovery is set, while CO and CO_2 are removed with the off-gas. The conditioned syngas, added with the hydrogen stream, is now suitable for methanol synthesis, and after being preheated at 158°C, it is sent to the adiabatic Gibbs reactor R-MeOH. The referring reactor is a Davy-Johnson-Matthey isothermal reactor, where the reagents are heated in the reactor till 240°C by using the heat of synthesis reaction. The effluent of R-MeOH is cooled till 30°C and separated, using the block flash separator, to recover raw methanol as much as possible. To achieve a methanol fuel grade, the stream is purified using two distillation towers: the first one is just an exhaustion distillation, used to remove as much as possible the off-gas, while the second one is a typical methanol-water distillation column. The off-gas, depicted in **Figure 6**, coming from the purge of the PSA and the distillation column, is collected and sent to a boiler where steam is produced.

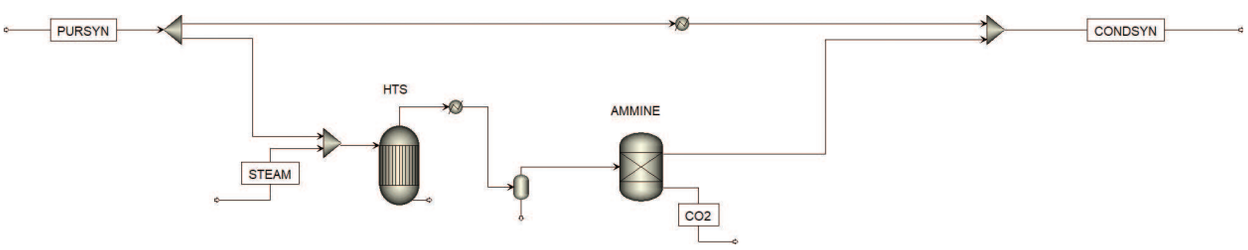

Figure 5. Syngas-conditioning scheme.

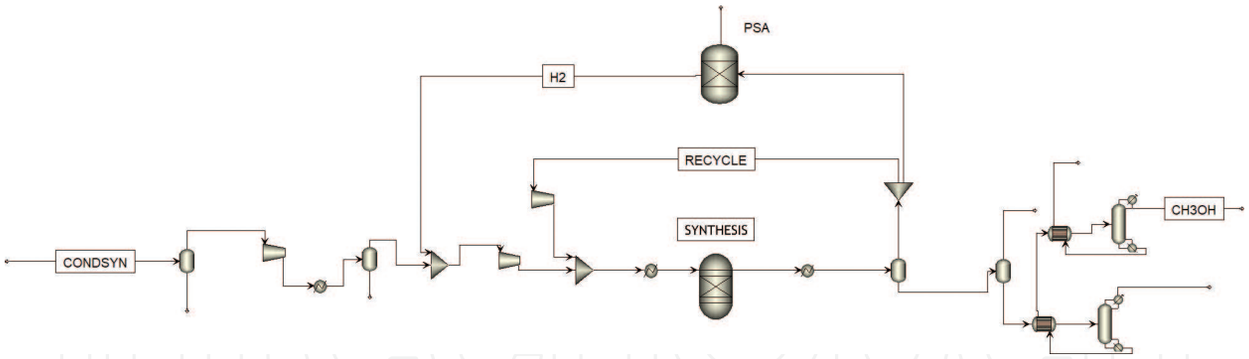

Figure 6. Methanol synthesis and purification scheme.

3. Process analysis

3.1. Influence on syngas composition

As already underlined, syngas composition plays a fundamental role in methanol synthesis step. Therefore, the optimization of the waste-to-methanol process requires analyzing the composition of syngas directly obtained from gasification unit and to investigate how the RDF composition and/or the gasifier-operating conditions can affect the syngas composition. In other words, it is interesting to investigate if a proper selection of RDF or an optimal choice of the gasifier-operating conditions can significantly improve the overall waste-to-methanol process efficiency.

3.1.1. Effect of RDF composition

According to its definition, waste is a solid mixture composed of variable quantities of refused materials belonging to different product classes [26]. However, its variable composition can be restricted to a reasonable limited range, as shown in **Table 2**; indeed, the waste composition can be defined in terms of three main mass fractions: the combustible fraction (CHO), the moisture fraction (MOI) and ash plus inert fraction (Ash&In). According to reasonable approximations, assuming in the combustible fraction, a carbon to hydrogen and a carbon to oxygen ratios, respectively, equal to 7.5 and 2, and a fixed composition of the Ash&In fraction. As reported in **Table 2**, waste ultimate analysis can be uniquely gathered from its composition in terms of CHO, MOI and Ash&In.

It is important to underline that the waste composition strongly affects the lower heating value (LHV) of the RDF; as evidenced in **Figure 7**, in particular, LHV is mainly dependent on the CHO fraction content of the waste. In this work, we assume an RDF with LHV in the range of 14 and 18 MJ/kg; therefore, only waste with composition in the highlighted color region in **Figure 7** is analyzed with our simulation tool.

The simulation of gasification unit has been carried out for several waste compositions derived from a fine discretization of the range depicted in **Figure 7**. As could be expected, syngas

CHO	50–80%	C/H = 7.5 C/O = 2	C	40–55%
			H	5–7.5%
			O	20–27.5%
Ash&In	10–25%	Cl = 0.75%		
		S = 0.15%		
		N = 1%		
		Ash = (Ash&In-Cl-S-N)	SiO_2 = 35.79%	
			CaO = 35.89%	
			Al_2O_3 = 13.32%	
			Fe_2O_3 = 15%	
MOI	10–25%			

Table 2. Waste composition range considered for feedstock characterization in the simulation tool.

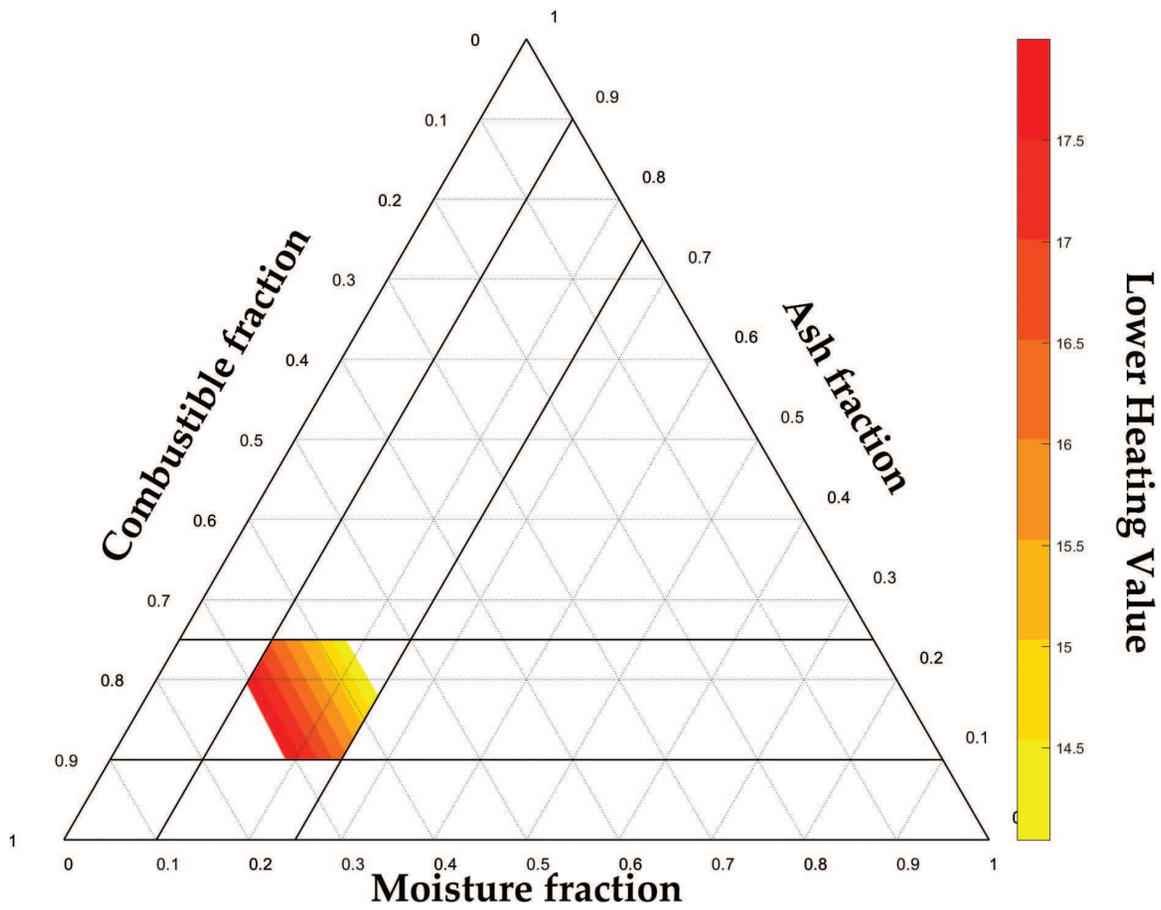

Figure 7. The lower heating value of waste as function of combustible, moisture and ash and inert contents.

composition is influenced by waste composition and LHV variation. Bearing in mind the requirements for methanol synthesis, it is useful to represent methanol module and carbon ratio—$CO_2/(CO + CO_2)$—variation as a function of waste LHV (**Figure 8**). Indeed, each LHV

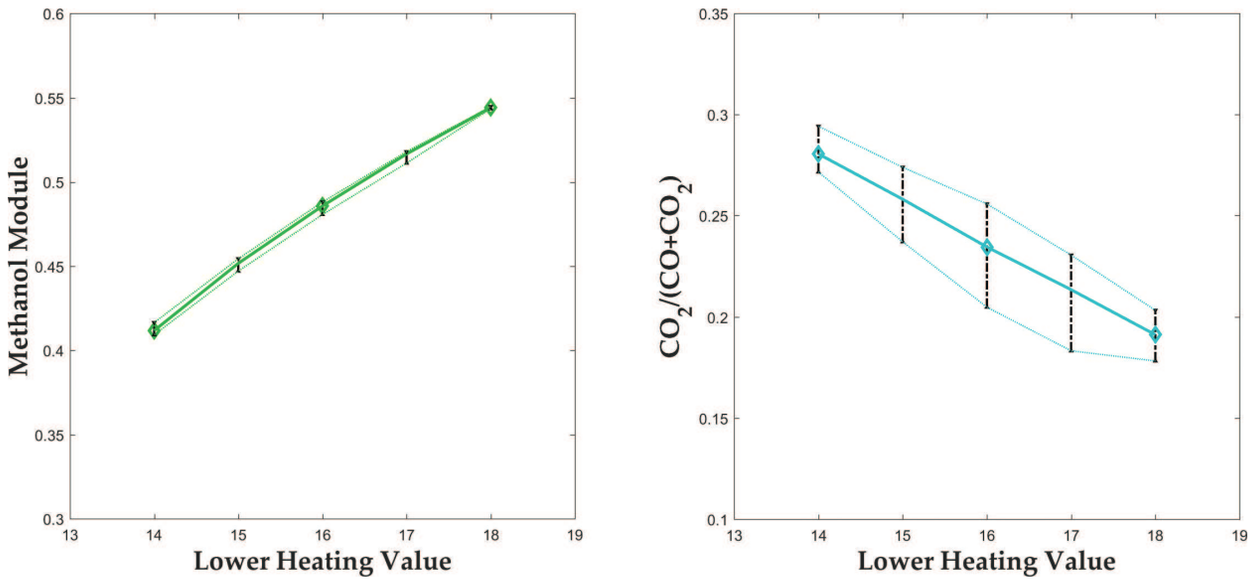

Figure 8. Methanol module and carbon ratio—$CO_2/(CO + CO_2)$—obtained with Aspen Plus simulation as functions of waste LHV (MJ/kg).

value can be obtained from different waste compositions (i.e. from waste with similar combustible fraction but different moisture or ash content) and can result in different syngas compositions; therefore, in each plot, a fixed LHV value corresponds to a range of MM or CO_2 content, actually depending on the MOI or Ash content. In the plots, the colored symbols '◊' represent the mean values of carbon ratio at LHV equal to 14, 16 and 18 MJ/kg. From the left panel of **Figure 8**, it is evident that for different waste compositions, with same LHV, methanol module values are very similar (i.e. MOI and Ash&In contents do not significantly affect the MM value), while a large variability is observed for the CO_2 to CO ratio (see the panel on the right). The strong correlation between methanol module and LHV is significant and supports the choice of LHV as a characterizing parameter for the feedstock, also for the analysis of the effects of RDF variability on the downstream process behavior.

Furthermore, as reported in **Figure 9** (left panel), the higher the waste LHV is, the higher the syngas yield is obtained, even if some variability related to the MOI and Ash content is observed. Finally, it is worth considering a gasification unit thermal efficiency defined as

$$\frac{LHV_{Syngas} \cdot kg_{Syngas}}{LHV_{RDF} \cdot kg_{RDF} + LHV_{CH_4} \cdot kg_{CH_4}}$$

where the heating value of the obtained syngas is compared with the total heating value of RDF and supplemental CH_4 fed to the gasifier. From the figure reported in the right panel of **Figure 9**, it is evident that the efficiency is strictly correlated to the LHV of RDF.

Comparing the obtained results with the technical requirements for methanol synthesis, it is evident that despite suitable $CO_2/(CO + CO_2)$ ratio that is always obtained, the MM values are always too low, even when RDF with a high heating value is used. That is why a conditioning step is required.

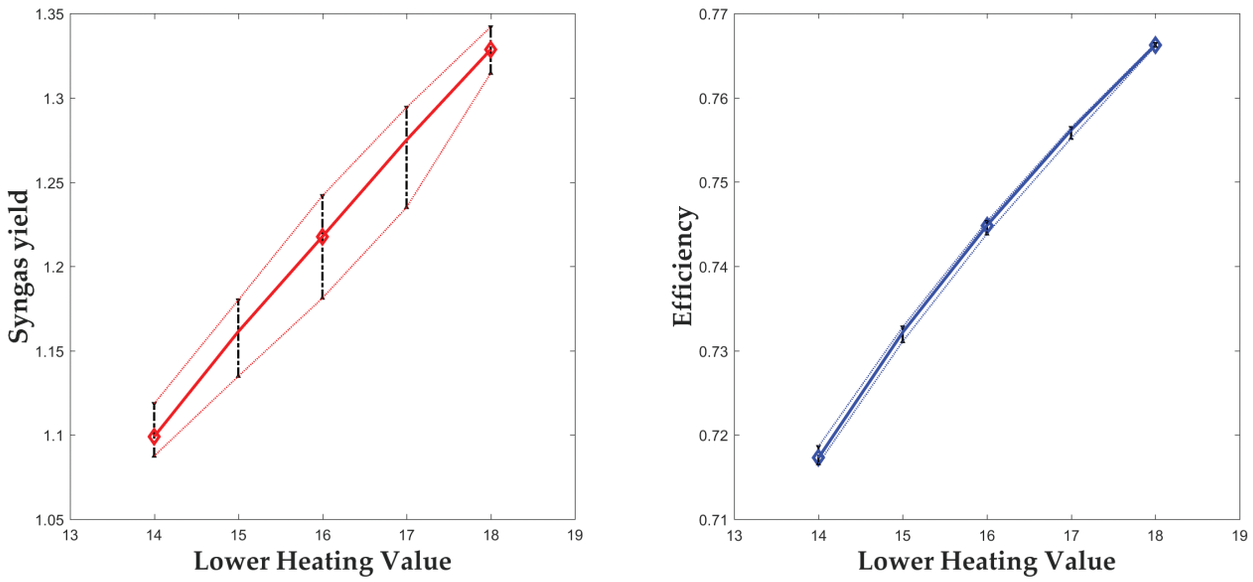

Figure 9. Syngas yield and efficiency obtained with Aspen Plus simulation as functions of waste LHV (MJ/kg).

3.1.2. Effect of operating condition

Usually, in gasification processes, the main examined operating conditions are operating pressure, temperature and gasification agent. In this case, the gasifier outlet temperature and the introduction of a supplementary steam stream have been deeply investigated.

3.1.2.1. Effect of temperature

The syngas composition and methanol synthesis parameters trends as a function of gasifier outlet temperature (i.e. equilibrium temperature of RG3 referred to **Figure 3**) are illustrated in **Figure 10**.

The represented trends show that both the methanol modulus and the ratio CO2/(CO + CO2) are improved at a lower gasification temperature, where the hydrogen content is higher. A reduction of the R-G3 temperature also reduces the oxygen consumption. However, a temperature higher than 1100°C must be provided in order to avoid dioxin formation and limit methane and tar content in syngas.

3.1.2.2. Effect of steam introduction

Steam is a possible oxidant [27], which can be additionally introduced in the gasifier with a controlled oxygen stream.

The results of the sensitive analysis made for different steam temperatures are depicted in **Figure 11**. Indeed, the steam injection results in two opposite effects: (1) an increase in H_2 production in the gasifier due to the shift reaction and (2) an increase in the heat required to maintain the top gasifier temperature equal to 1100°C, which in turn results in an increase in the oxygen consumption for exothermic reactions, including hydrogen combustion. These

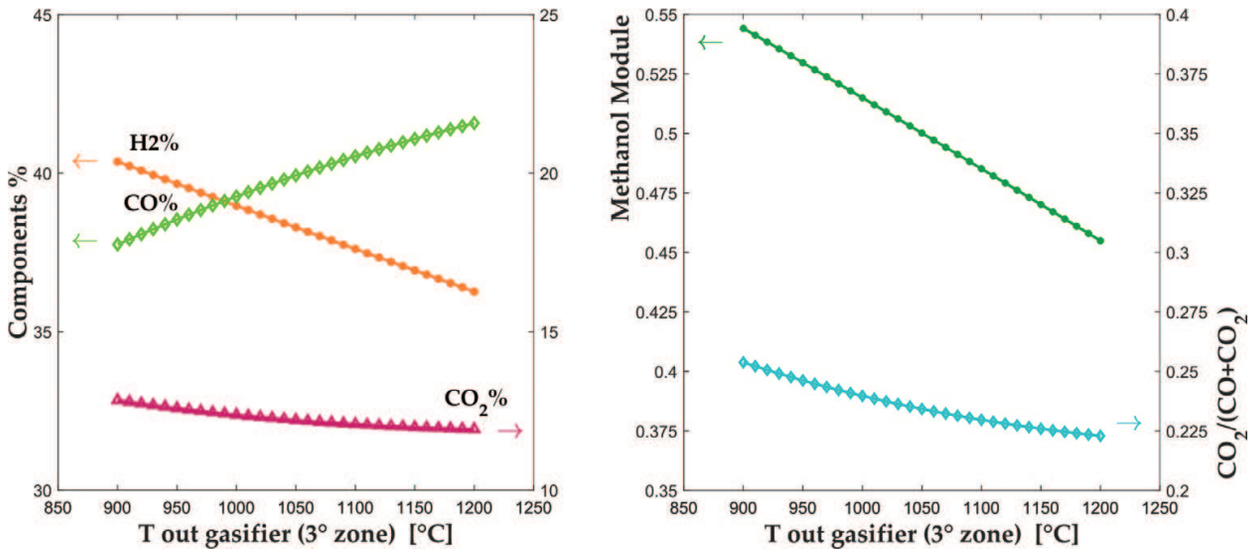

Figure 10. In the left panel, H_2, CO and CO_2% of syngas from gasifier as a function of its outlet temperature—third Gibbs reactor temperature (in Aspen Plus simulation). In the right panel, methanol module and carbon ratio as a function of syngas outlet temperature.

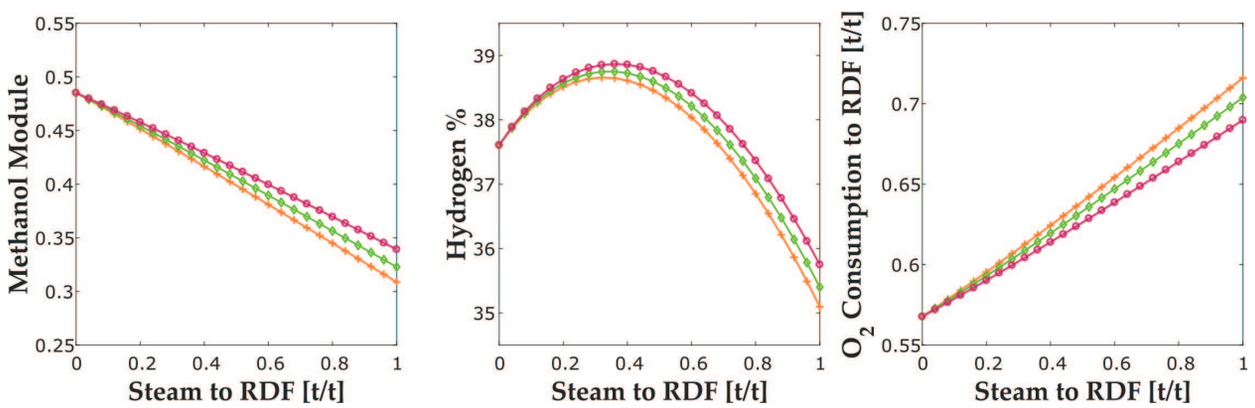

Figure 11. Methanol module, hydrogen % in syngas and O_2 consumption to RDF (t/t) as a function of steam to RDF (t/t) value, for different steam inlet temperature '+' 130°C, '◊' 210°C and 'o' 300°C.

mentioned factors explain the maximum hydrogen content, at steam to RDF ratio near to 0.35 and the increase in CO_2 content in syngas; on the whole, steam injection results in a reduction of methanol module. As results show, the increment of steam temperature is not enough relevant. On the other hand, steam might be able to destroy tar at a lower temperature and it could decrease the burner's outlet temperature which causes corrosion of refractory reactor covering. These possible benefits cannot be quantified with the support of the illustrated simulation that assumes thermodynamic equilibrium hypothesis. Obviously, a kinetic and fluid-dynamic model of the gasifier should be developed in the future to better analyze and optimize the process.

3.2. Influence on methanol production

Once the RDF is gasified, the obtained syngas has to be properly conditioned, as already described in Section 2. The syngas composition variation will cause the alteration of some

operating parameters of the conditioning section. Here, a controller is set to maintain MM equal to 2.1 at the inlet of the methanol synthesis reactor, by varying the percentage of syngas sent to the shift reactor. Consequently, the superheated stream to add to the shift reactor R-HTS, the methanol yield and CO_2 produced will be affected by this variation, depicted in **Figure 12**. As reported in Section 3.1.1, syngas composition depends on the RDF LHV. In particular, methanol module exhibits a linked correlation with LHV. For this reason, three main syngas compositions corresponding to RDF with LHV equaling to 14–16–18 MJ/kg have been selected, with the aim of analyzing the influence of feedstock variation on methanol production. **Figure 12** shows how the LHV values affect the main operating parameters of the conditioning section.

When waste LHV varies, also syngas flow rate is influenced and as a consequence methanol productivity. However, to better compare consumptions that occur for waste with different LHVs, it has been taken into account to obtain a fixed amount of methanol; in particular, when LHV decreases, a higher quantity of RDF to gasify is required. As represented in **Figure 12**, the values of operating parameters increase with the decrease in LHV. Then, we refer as design case to the process converting waste with lowest LHV of 14 MJ/kg.

3.3. Optimized process: mass and energy balance

The Italian municipal solid waste generated, expressed in kg per person per year, is equal to 529 [2]. With this number in mind, and considering that RDF represents a third of MSW quantity, a defined RDF quantity to gasify has been considered. A gasification line has a period of planned and unplanned maintenance. To avoid a plant arrest, three gasification lines working in parallel were adopted, so that when one of them stops, the other two work at their maximum capacity, providing only an 80% of turndown. For the design case, a gasification line with a normal capacity of 7.5 t/h is adopted, so that the available RDF (with 14 MJ/kg) is equal to 540 t/d.

Referring to **Figure 13**, a utility consumption has been performed for a further detailed economical evaluation. As shown in **Figure 13**, a 540 t/d feed is required to produce 225 t/d of

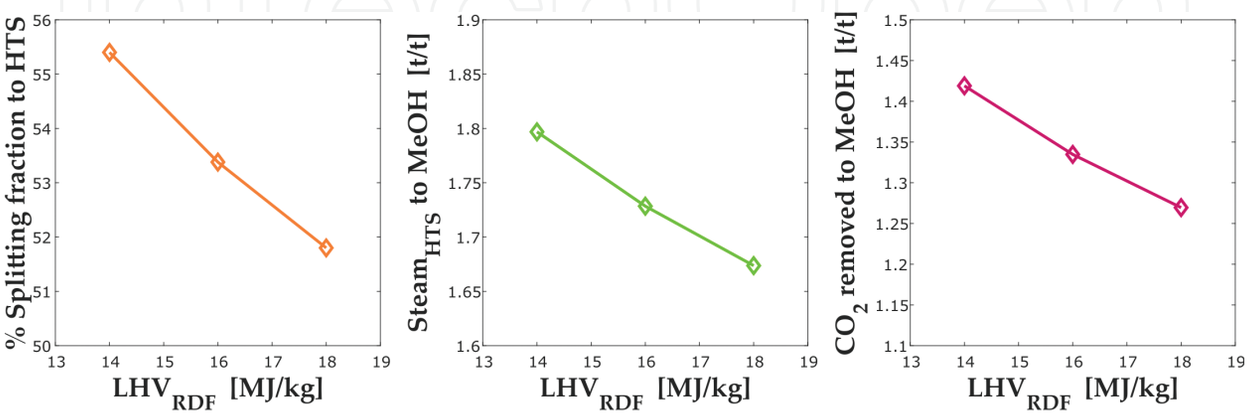

Figure 12. The variation of main operating parameters with a lower heating value.

bio-methanol. The CO_2 obtained comes from the CO_2 removal system and the flue gases of a boiler used to supply steam for the hydrolysis reactor, the HTS reactor, the CO_2 reboiler and the distillation reboilers. The cooling water (CW) reported in **Figure 13** is low because it just represents the reintroduction of water in the cooling tower system.

A comparison between a WtE and a WtC process with a typical incinerator, in terms of CO_2 emission and methane consumption, is necessary to understand the relevance of a waste to chemical conversion. To evaluate those parameters, the same gasified quantity has been assumed. In **Table 3**, CO_2 emissions of each process are reported in terms of CO_2 kg per kg of methanol.

A WtE process could be seen as a waste disposal method and as an energy production system; likewise, a WtC process could be seen as a waste disposal method and as a methanol production process. Therefore, in order to correctly compare them, CO_2 emission of WtE has to be added with the emission of a conventional methanol process, per unit of methanol produced. For that, waste combustion emission is equal to 2.96 kg CO_2/kg MeOH, considering that 2.4 kg RDF, which would be converted for 1 kg of methanol produced and that the direct emission of process is 1.23 kg CO_2/kg RDF. According to the same rules, WtC emissions are equal to the sum of the direct process emission (1.7 kgCO_2/kg MeOH) and the emission connected to the conventional energy production related to the same MW amount which would be produced by converting, through WtE, the RDF quantity, used for 1 kg of methanol synthesis (0.96 kg CO_2/

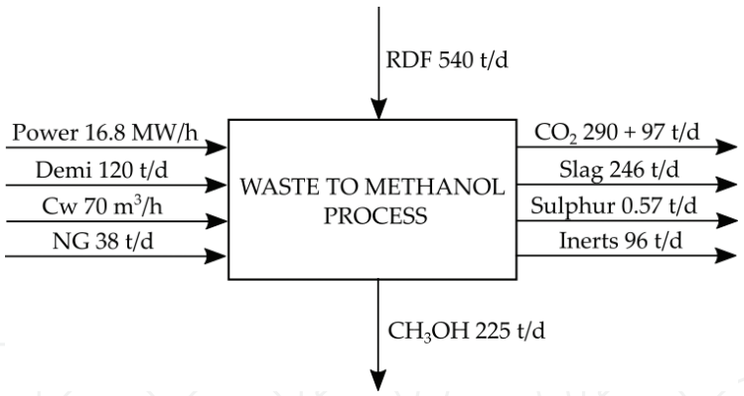

Figure 13. Overall process analysis consumption.

		$\frac{kgCO_2}{kgCH_3OH}$	$\frac{kgCH4}{kgCH_3OH}$
WtE	Conventional methanol production process	0.76	0.69
	Waste combustion	2.96	0.07
WtC	Conventional energy production	0.96	0
	Waste-to-methanol process	1.7	0.17

Table 3. Value considered to compare waste to energy and waste to chemical in terms of CO_2 emission [8] and CH_4 consumption.

kg MeOH). In this way, a reduction of 30% of GHG emission is obtained by comparing a WtC process with a WtE process.

Moreover, to evaluate CO_2 emission saved in a waste to chemical conversion, it is important to compare how much CO_2 is emitted when RDF is burnt and methanol is produced in a conventional way and with the waste-to-methanol process. Therefore, the following ratio is considered:

$$\frac{CO_2 \textit{ from a waste to methanol process}}{(CO_2 \textit{ from combustion} + CO_2 \textit{ from conventional methanol production}}$$

According to the value reported in **Table 3**, a saving of 54% is reached. Other than from an environmental point of view, even the consumption (in terms of methane usage) has been reported, to emphasize the importance of a WtC process.

4. Economical analysis

The process scheme reported in **Figures 1–6** provides an idea of the units required in a waste-to-methanol process. To evaluate the techno-economical feasibility of this process and decide whether or not this technology has a chance to be applied, a deep economical evaluation is required. Economic parameters used to estimate the cost of production (COP) are summarized in **Table 4**.

First of all, an analysis of the equipment employed is necessary to evaluate the CAPEX of the process.

As depicted from **Table 4**, the most relevant cost is related to the gasification lines, including the first purification treatment unit. Moreover, an Air Separation Unit is required when a gasification with pure oxygen is used. The additional costs for oxygen production appear justified on the basis that a higher syngas heating value is obtained [5] and less inert compounds circulate on the overall conditioning and synthesis unit. Once the total equipment cost is defined, an estimate of the total investment cost is predictable, as shown in **Table 5**. To define the CAPEX, an analysis of the total direct and indirect costs is necessary, including also the contract profit and the contingency.

	M €
HT converter reactor (3 lines)	25
ASU, gasometer and compressors	12
Syngas purification and conditioning	7
Methanol synthesis and purification	10
Total	**54**

Table 4. Total equipment cost.

	M €	% of delivered equipment cost
Equipment costs	54	100
Bulk materials (piping, instrumentation, electrical)	38	70
Building and civil works	16	30
Total Direct Costs	**108**	**200**
Engineering and site supervision	13	25
Construction	51	90
Total Direct Costs + Indirect Costs (TOT)	**172**	**315**
Contractors profit 7%	13	25
Contingency 10%	17	32
Fixed capital investment (CAPEX)	**202**	**372**

Table 5. Estimated investment cost.

The key assumption parameters used to make this evaluation are presented in **Table 6**.

The main advantage of producing bio-methanol by gasifying RDF is that according to UNI EN 15359, when an RDF with an LHV value less than a classified 'Type 3' is used, the process is considered as a disposal method and the usage of RDF becomes an income and not a cost. Moreover, nowadays, CO_2 with a high purity level is employed in many agro-industrial processes, so the CO_2 obtained from the CO_2REMOV UNIT could also be considered as an income, since it has a secondary usage. Therefore, the inert and sulfur compounds coming, respectively, from the gasification and the conditioning unit could also be used as an additional income, but they are less effective than RDF and CO_2, so they were not taken into account for the scope of this economical analysis.

RDF price (flock type), €/t (Italian basis)	85
Electricity price, €/MWh	50
Natural gas, €/kg (considering 115,000 kcal/kg)	0.30
Slag disposal costs, €/t	10
CAPEX, M€	202
RDF capacity, t/y	182,115
Methanol capacity, t/y	76,518
Slag capacity, t/y	33,691
Plant factor, h	7650
Depreciation factor (based on a 20-year life and 6% interest rate)	0.0875
Calculated cost of excess CO_2 capture, €/t	30

Table 6. Key economic assumption and parameters.

Costs	**M€/y**
Power consumption	6.0
Natural gas	1.74
Slag disposal	0.34
Maintenance	4.1
Other (including labor and chemicals)	2.96
Total costs	15.14
Depreciation rate	17.7
Total costs + Depreciation	32.84
Incomes	**M€/y**
RDF	15.5
CO_2 recovered	3.1
Total Incomes	18.6
COP	**€/t**
(Total Costs − Total Incomes)/Methanol capacity	**186**

Table 7. Cost of production per ton of methanol produced.

On this assumption, the total cost of production is equal to 186 €/t (**Table 7**). The selling methanol price (methanol produced in a conventional way) is 300–320 €/t, whereas the bio-methanol price is estimated as 464 €/t; in this way, a margin of 278 €/t of methanol is obtained.

The estimated Internal Rate of Return (IRR) is in the range of 22–23%, as shown in **Table 8**, which indicates a good profitability in the waste-to-methanol process. Moreover, the IRR value is strictly dependent on the price of RDF, here estimated as 85 €/t by increasing this, the IRR could become higher.

	M€
Profit from methanol	35.5
Other revenues (including ones from RDF and CO_2 certificate)	18.6
Total variable cost	(15.14)
Bank loan (considering 2/3 of the Capex as loaned)	(9.11)
Profit before taxes	**29.84**
Taxes (50%)	14.92
Net Profit	**14.92**
IRR%	**22.4**

Table 8. Calculation of return on investment.

5. Conclusion

The conversion of RDF into methanol, which can be termed bio-methanol due to its production from a renewable source, has the advantage of offering a new nontoxic-disposal methodology and of valorizing the feedstock by transferring the RDF carbon source into a valuable resource; in this process, in fact, the RDF carbon matrix is partially fixed in the methanol molecule and the remaining part is recovered in the form of pure CO_2. In this way, on one hand, an environmental-friendly process has been proposed, and, on the other hand, the target of providing 10% of advanced biofuel within 2020, disposed by Italian regulation, is achieved, taking into account the possibility of adding 'Bio-methanol' to transport fuel. Moreover, a reduction of 50% of GHG emission could be reached, comparing waste-to-methanol process with both methanol conventional process and RDF combustion as disposal method. From an environmental point of view, a good combination of the HT gasification process, proposed by 'OESA s.r.l., with the conditioning process is fundamental to lower as much as possible the GHG emission and avoid toxic substances formation, as dioxins which cause devastating effects on human health. All this could not be achievable without the combination of both sections: the gasification process itself could lead to syngas formation free of toxic substances but its conversion into energy, in a WtE optic, will contribute to the addition of GHG emission, whereas the syngas conversion into bio-methanol will provide a major contributor in environmental terms due to the GHG emission reduction. From an economical point of view, the bio-methanol cost of production allows a good margin, taking into consideration a major selling price of bio-methanol, mainly because RDF gasification is an income and not a cost. Moreover, bio-methanol produced from waste has the benefit of the double counting, as reported in the Renewable Energy Directive, so exploiting the fact that it counts double, it could be seen as an excellent investment considering the target to achieve through advanced biofuel by 2020.

Author details

Annarita Salladini[1]*, Emanuela Agostini[2], Alessia Borgogna[3], Luca Spadacini[4], Maria Cristina Annesini[3] and Gaetano Iaquaniello[5]

*Address all correspondence to: salladini.a@processiinnovativi.it

1 Processi Innovativi s.r.l., Rome, Italy

2 BIO-P s.r.l., Rome, Italy

3 Department of Chemical Engineering, 'La Sapienza' University, Rome, Italy

4 OESA s.r.l., Rome, Italy

5 KT Kinetics Technology S.p.A., Rome, Italy

References

[1] Rapporto Rifiuti Urbani. ISPRA; 2016

[2] Massarini P, Muraro P. RDF: From waste to resource–the Italian case. Energy Procedia. Elsevier. 2015;**81**:569-584

[3] Greenhouse Gas Emissions [Internet]. United States Environmental Protection Agency; 2017. Available from: https://www.epa.gov/ghgemissions/overview-greenhouse-gases

[4] Gohlke O, Martin J. Drivers for innovation in waste-to-energy technology. Waste management & research. Sage Publications Sage UK: London, England. 2007;**25**:214-219

[5] Arena U. Process and technological aspects of municipal solid waste gasification: A review. Waste management. Elsevier. 2012;**32**:625-639

[6] Consonni S, Viganò F. Waste gasification vs. conventional waste-to-energy: A comparative evaluation of two commercial technologies. Waste management. Elsevier. 2012;**32**:653-666

[7] Antonetti E, Iaquaniello G, Salladini A, Spadaccini L, Perathoner S, Centi G. Waste-to-chemicals for a circular economy: The case of urea production (waste-to-urea). ChemSusChem. Wiley Online Library. 2017;**10**:912-920

[8] Iaquaniello G, Centi G, Salladini A, Palo E, Perathoner S, Spadaccini L. Waste-to-methanol: Process and economics assessment. Bioresource Technology. Elsevier. 2017;**243**:611-619

[9] EU Renewable Energy Directive (2009/28/EC). European Union; 2009

[10] Lapola DM, Schaldach R, Alcamo J, Bondeau A, Koch J, Koelking C, et al. Indirect land-use changes can overcome carbon savings from biofuels in Brazil. In: Proceedings of the national Academy of Sciences. National Acad Sciences. 2010;**107**:3388-3393

[11] Biofuels and green chemicals [Internet]. Enerkem S.r.l.; 2017. Available from: http://enerkem.com/biofuels-and-green-chemicals/

[12] Energy Recovery System L.t.d. [Internet]. Energy Recovery System L.t.d.; 2017. Available from: http://www.ers-ksa.com/

[13] Aasberg-Petersen K, Nielsen CS, Dybkjær I, Perregaard J. Large scale methanol production from natural gas. Haldor Topsoe. 2008;**22**

[14] Grabow L, Mavrikakis M. Mechanism of methanol synthesis on Cu through CO_2 and CO hydrogenation. Acs Catalysis. ACS Publications. 2011;**1**:365-384

[15] McKay G. Dioxin characterisation, formation and minimisation during municipal solid waste (MSW) incineration. Chemical Engineering Journal. Elsevier. 2002;**86**:343-368

[16] Scheirer GE, Wu FS, Kiliany TR. Systems and processes for reducing the sulfur content of hydrocarbon streams. U.S. Patent No. 7,427,385. Washington, DC: U.S. Patent and Trademark Office. 2008

[17] LO-CAT® H2S Removal Technology [Internet]. Merichem; 2017. Available from: http://www.merichem.com/gas/upstream/natural-gas/lo-cat

[18] Aspen Plus [Internet]. Aspen Tech; 2017. Available from: http://home.aspentech.com/products/engineering/aspen-plus [Accessed 2018-03-28]

[19] Aspen Plus (2004). Getting Started with Modeling Processes with Solids. Cambridge, MA: Aspen Technology. Inc.; 2013

[20] Ilaiah S, Sasikanth DV, Satyavathi B. Process Simulation of a Entrained Fluidized Bed Biomass Gasification using Aspen Plus. In: Proceedings of 3rd International Conference on Recent Trends in Engineering Science and Management ICRTESM-16); Bundi, Rajasthan: Vedant College of Engineering and Technology; 10th April 2016

[21] Gopaul SG, Dutta A, Clemmer R. Chemical looping gasification for hydrogen production: A comparison of two unique processes simulated using ASPEN Plus. International Journal of Hydrogen Energy. Elsevier. 2014;**39**:5804-5817

[22] Emun F, Gadalla M, Majozi T, Boer D. Integrated gasification combined cycle (IGCC) process simulation and optimization. Computers & chemical engineering. Elsevier. 2010;**34**:331-338

[23] Mills KC. Physic-chemical properties of slags and ashes. ACS symposium series.Washington, DC, USA: American Chemical Society; 1986;**301**:195–214.

[24] Effendi A, Hellgardt K, Zhang Z-G, Yoshida T. Optimising H2 production from model biogas via combined steam reforming and CO shift reactions. Fuel. Elsevier. 2005;**84**:869-874

[25] Kohl AL, Nielsen R. Gas Purification. 5th ed. Houston: Gulf Publishing Co.; 1997

[26] Salladini A, Borgogna A, Spadacini L, Pitrelli A, Annesini M, Iaquaniello G. Methanol production from Refuse Derived Fuel: A preliminary analysis on the influence of the RDF composition on process yield. In: Proceedings of 5th International Conference on Sustainable Solid Waste Management (Athens). 2017

[27] Ramzan N, Ashraf A, Naveed S, Malik A. Simulation of hybrid biomass gasification using Aspen plus: A comparative performance analysis for food, municipal solid and poultry waste. Biomass and Bioenergy. Elsevier. 2011;**35**:3962-3969