Chapter 1

Introductory Chapter: Introduction to Ion Implantation

Ishaq Ahmad and Waheed Akram

Additional information is available at the end of the chapter

http://dx.doi.org/10.5772/intechopen.68785

1. Introduction

This chapter elucidates the concept of low-energy/high-energy ion implantation and its key applications in materials science. Ion implantation is the interaction of energetic ion beam with solids. In this ion-solid interaction, ions penetrate through the materials and slow down to some extent into the materials due to electronic and nuclear energy loses. From the 1950s to a few decades back, ion beam implantation has only been known as a process used for damaging the surface of bulk materials and ion implantation of semiconductors to make p-type or n-type materials. However, ion implantation has been proven in recent studies as a reliable technique to tune the properties of bulk materials, thin films, nanostructure materials and biocompatible materials for specific applications [1–4]. Nevertheless, material properties can be altered as per proper selection of ion species, ion energy, substrate temperature, and ion fluencies.

Energetic ions usually consider here in this chapter ranging from keV to hundreds of MeV are mainly produced from different ion sources. These ions are then accelerated up to required energies according to their applications. For surface treatment of solids or ions doping in semiconductors, usually low-energy ion implanters in keV ranges are applied. Recently developed FIB is categorized as low-energy ion system, which enables heavy ion micromachining to fabricate micro and nanodevices. Whereas, medium-energy ions from medium energy electrostatic accelerators are used for proton beam writing, synthesis and modification of thin films [5, 6]. High-energy protons and Swift's heavy ions having hundreds of MeV energies are applied for a surface modification and intrinsic physical properties of thin films [7]. High-energy protons and Swift's heavy ions can be produced normally in electrostatic accelerators or cyclotrons.

For reader's convenience, further elaboration of the ion energies into three broad categories and their impacts on materials is as follows:

1.1. Low-energy ion implantation: range ~ 1 to 200 keV

Ion implantation is usually the low-energy process to introduce doping atoms into a semiconductor wafer to form devices and integrated circuits. Low-energy ion implanter is shown in **Figure 1**. In low-energy ion implanter system, ions of materials are generated and accelerated through the electric field and then irradiate on samples.

Presently, advanced applications of low-energy ion implanters include modification of the physical, chemical, or electrical or magnetic properties of thin films and nanostructure materials through doping of atoms as well as defect production. Sometimes, synthesis of doped nanostructure materials is difficult through chemical methods but ion implantation made it possible to dope required atoms. Recently, Ishaq et al. used ion implanter to irradiate carbon nanostructures with 70 keV H, N, and Ar ions to change the morphology and structure [8]. Moreover, low-energy ion implanter can be used to weld nanowires, nanotubes, or integrate nanowires to make nanodevices, which are a unique application of ion implanter in nanotechnology [9, 10]. Low-energy ion implanter was utilized to weld carbon nanotubes and fabricate carbon nanotubes network by ion beam irradiation to improve electrical properties as shown in **Figure 2** [9, 11]. In addition, low-energy ion implanter was utilized to make metal-semiconductor junctions for future device fabrication [10]. In low-energy regime, ions interact with nanowires deposit energy to target atoms and materials are sputtered. These sputtered atoms deposit on junction positions and same time ion beam induced collision cascade effects to weld nanowires/nanotubes.

Recently, a low-energy FIB system has been developed for controlled three-dimensional (3D) micromachining and fabricates ultra-modern micro and nanodevices used in different applications [12]. Either this system can be used for precise doping in nanoscale regime or implant in few atoms in biological samples for DNA damage studies. Low-energy FIB is also used in deposition and ablation of materials. In this FIB system, usually heavy ions such as

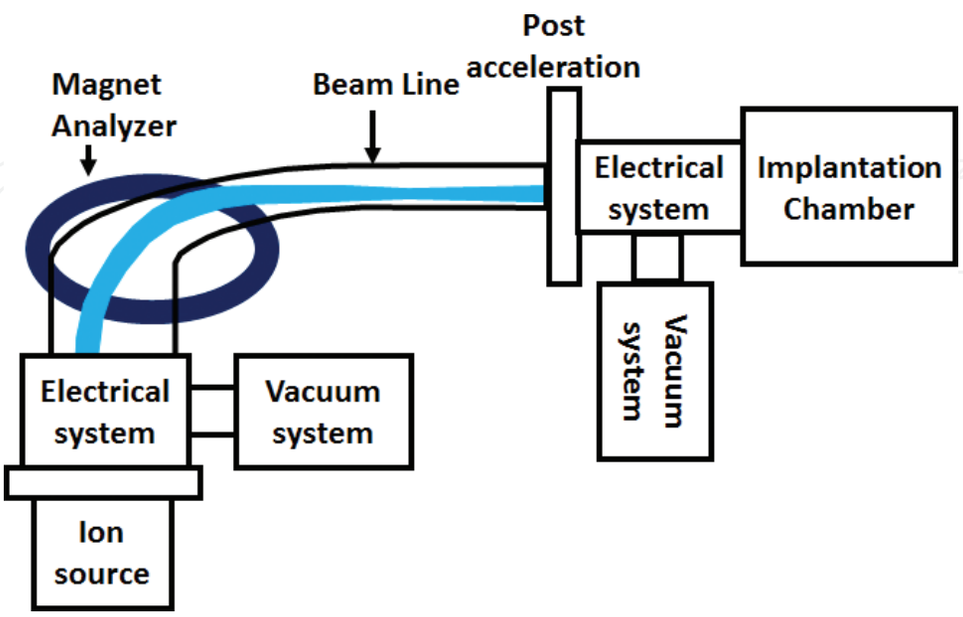

Figure 1. Ion implanter.

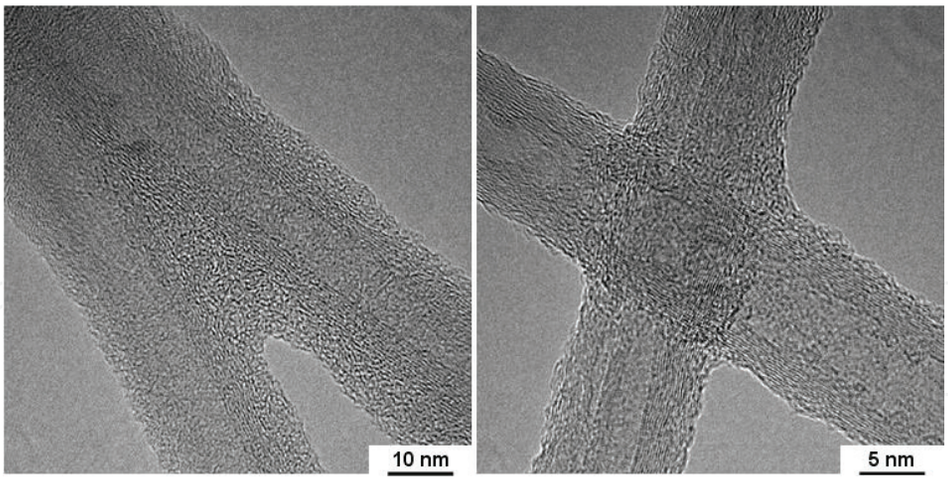

Figure 2. Welding of carbon nanotubes by keV ion implantation [11].

Ga ions hit the target materials and sputter atoms from the target samples due to elastic collision, allowing precision milling of the specimen down to a submicrometer or even a nanoscale. More applications of low-energy ion implanter are presented in the proceeding chapters of this book.

1.2. Medium-energy ion implantation: range ~ 300 keV to 50 MeV

Medium-energy ions are usually generated and accelerated from medium-energy ion beam accelerators such as Van de Graaff or pelletron accelerators. Due to the advancement in accelerator technologies and instrumentations, we can get controlled ion beam with a different spot size of the ion beam. Even nowadays, single atom can be accelerated and implanted into the required position of samples. In medium-energy ion beam accelerators, one or two types of different ion sources are attached, which generate almost all types of ions from hydrogen to uranium. These ions are then accelerator through high-energy system as shown in **Figure 3**. Micro beamline can be used for proton beam writing where micro and nanodevices can be fabricated, whereas ion implantation beamline can be used for medium-energy ion implantation into the materials.

Medium-energy ion accelerators are versatile and advanced technologies can be applied in the different field of sciences. Regarding ion implantation, medium-energy ions are effectively

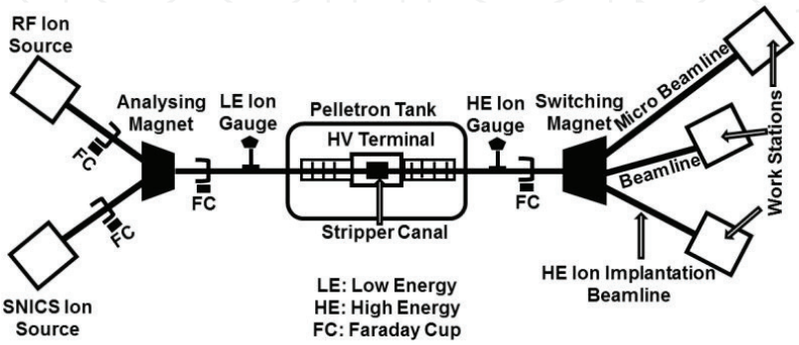

Figure 3. Tandem pelletron accelerator.

utilized for deep ion implantation purpose. It is possible to implant required ion species into required depth of samples precisely. High-energy ions have greater penetrating capabilities in materials while maintaining a straight path.

During ion implantation, ion beam induced collision cascade effect and induced surrounding heat along the path of ions tracks, which should be managed for proper ion implantation to prevent damage into the target material. In the case of uncontrolled ion beam irradiation or high current irradiation, induced ion beam produced great defects, which lead the target materials to amorphization or phase transformation. Therefore, low implantation ion beam current is advised to minimize ion beam induced local heating for prevention of amorphization or other phase transformations. Ishaq et al. successfully implanted C-atoms into BNNTs using MeV C ions through pelletron accelerator to form boron carbonitride nanotubes [13]. Whereas uncontrolled MeV ion beam implantation on crystalline silver nanowires lead to form amorphous silver nanowires [14]. Sometimes, high-energy ion implantation is required to produce defects into materials for functionalization of materials especially polymer-based materials for biological applications or enhance the absorption properties of materials [4]. For this purpose, the high current ion beam is required to create such defective structures. Additionally, these defective structures are important for different applications such as attached functional groups and enhanced sensing properties of gas sensors etc. These medium-energy ions are also explored new application in nanotechnology. Recently, tandem accelerator was employed to weld nanowires or making large area welded network of nanowires [15]. High-energy ions produce local heating along the path of ion track and at the same time collision cascade effects make a rearrangement of atoms at the junction point which results in welding of metal nanowires. Recently, Shehla et al. weld silver nanowires by medium-energy ion beam implantation [16]. More applications of medium-energy ion implanter are well presented in the proceeding chapters of this book.

1.3. High-energy ion irradiation: range ~ 50 MeV to hundreds of MeV

High-energy ions include protons and swift heavy ions (SHI) are usually generated and accelerated from high-energy ion beam accelerators such as a cyclotron or high potential terminal voltage tandem electrostatic accelerators, same as shown in **Figure 3**. Moreover, cyclotron produces high-energy ions with high ion currents of the order of a milliamperes, which is useful for many applications. High-energy protons, alpha particles, and deuterons are used for radioisotopes production from stable elements for medical applications. The application of SHI includes characterization of materials and modification of materials to radioisotopes production for medical treatments, etc. Atomic displacements caused by SHI irradiation produces collision cascade effects which allow the target material to modify its properties. Additionally, SHI also helps to produce structural defects in materials to change the chemical, optical, electrical, or magnetic properties. Ion beam mixing induced by SHI irradiation is another application where some thin film alloys are difficult to fabricate. Through SHI ion beam mixing, such alloys are now possible. For example, TiBe alloy thin film is difficult to fabricate through chemical or physical processes. In ion beam mixing, just make multilayer Ti and Be films through thin film coating system and irradiate SHI to mix atoms. TiBe alloy will perfectly fabricate due to collision cascade effects, electronic excitation, and ion beam induced local heating along the ion track.

This book covered various topics regarding the use of different ion energies, ion beam accelerators, and impacts of ions application in materials science studies. The impact of these ions on materials is characterized using long range of advanced analytical techniques, such as nuclear reaction analysis (NRA), elastic recoil detection analysis (ERDA), Rutherford backscattering spectrometry (RBS), RBS/channeling, high-resolution X-ray diffraction (HRXRD), XRD, alternating gradient magnetometer (AGM), SQUID magnetometer, positron annihilation spectroscopy (PAS), positron annihilation–induced Auger electron spectroscopy (PAES), electron spin resonance spectroscopy, low-high frequency CV measurements, deep level transient spectroscopy (DLTS), internal photoemission spectroscopy (IPE), prism coupling technique for refractive index measurement, thermally stimulated current (TSCM), soft X-ray emission spectroscopy (SXES), Fourier transform infrared spectroscopy (FTIR), scanning electron microscope (SEM), X-ray photoelectron spectroscopy (XPS), zeta potential analyzer, atomic-force microscopy (AFM), and environment control scanning probe microscope.

Author details

Ishaq Ahmad* and Waheed Akram

*Address all correspondence to: ishaq.ahmad@ncp.edu.pk

National Center for Physics, Islamabad, Pakistan

References

[1] Husnain G, Yao S-D, Ishaq A, Rafique HM. Structural and magnetic impact of Cr^+ implantation into GaN thin film. Solid State Sciences. 2012;**14**:735-738

[2] Ni Z, Ishaq A, Yan L, Gong J, Zhu D. Enhanced electron field emission of carbon nanotubes by Si ion beam irradiation. Journal of Physics D Applied Physics. 2009;**42**:075408.

[3] Ishaq A, Yan L, Zhu D. The electrical conductivity of carbon nanotube sheets by ion beam irradiation. Nuclear Instruments and Methods in Physics Research Section B: Beam Interactions with Materials and Atoms. 2009;**267**:1779-1782

[4] Tsuji H, Sommani P, Kitamura T, Hattori M, Sato H, Gotoh Y, Ishikawa J. Nerve-cell attachment properties of polystyrene and silicone rubber modified by carbon negative-ion implantation. Surface and Coatings Technology. 2007;**201**:8123-8126

[5] Shehla H, Ishaq A, Awais A, Thema FT, Javed I, Wang D, Rauf K, Nasir K, Naseem S, Maaza M. Silver nanowires stability and burying into substrates under MeV proton irradiation. Current Nanoscience. 2016;**12**:774-780

[6] Shakil K, Ishaq A, Noaman K, Mazhar M, Waheed A, Maaza M. Carbon ions irradiation induced modifications in structural and electrical resistivity characteristics of ZrN thin films. Materials Science in Semiconductor Processing. 2015;**39**:530-535.

[7] Smita S, Narayan H, Sulania I, Thakurdesai M. Swift heavy ion irradiation induced nanograin formation in CdTe thin films. Nuclear Instruments and Methods in Physics Research Section B: Beam Interactions with Materials and Atoms. 2016;**387**:1-9

[8] Ishaq A, Shahid I, Naveed A, Khurram AA, Akrajas AU, Dee CF, Naseem S, Rafique HM, Long Y. H^+, N^+, and Ar^+ ion irradiation induced structure changes of carbon nanostructures. New Carbon Materials. 2013;**28**:81-86

[9] Ishaq A, Ni Z, Yan L, Gong J, Zhu D. Constructing carbon nanotube junctions by Ar ion beam irradiation. Radiation Physics and Chemistry. 2010;**79**:687-691

[10] Dee CF, Ishaq A, Long Y, Zhou X, Majlis BY. Contact welding study of carbon nanotube with ZnO nanowire. Physica E: Low-Dimensional Systems and Nanostructures. 2011;**43**:1857-1862

[11] Yan L, Zhou G, Ishaq A, Zhou X. Improving the electrical conductivity of multi-walled carbon nanotube networks by H ion beam irradiation. Carbon. 2011;**49**:2141-2144

[12] Kim SJ, Yamashita T, Nagao M, Sato M, Maeda H. Development of 3D focused-ion-beam (FIB) etching methods for fabricating micro- and nanodevices. The Japanese Journal of Applied Physics. 2002;**41**:4283-4286

[13] Ishaq A, Naqvi SR, Iqbal J, Bo L, Yan L, Dee CF, Baig A. Substitutional carbon doping of hexagonal multiwalled boron nitride nanotubes (h-MWBNNTs) via ion implantation. The Journal of Nanoparticle Research. 2014;**16**:2170-2178

[14] Shehla H, Awais A, Zongo S, Javed I, Ishaq A, Khizar H, Naseem S, Maaza M. Fabrication of amorphous silver nanowires by helium ion beam irradiation. Chinese Physics Letters. 2015;**32**:096101

[15] Shehla H, Naseem S, Ishaq A, Maaza M, Bhatti MT, Wan D. Large scale silver nanowires network fabricated by MeV hydrogen (H^+) ion beam irradiation. Chinese Physics B. 2016;**25**:046105

[16] Shehla H, Ishaq A, Yaqoob K, Javed I, Saira R, Shahzad N, Maaza M. Ion beam irradiation-induced nano-welding of Ag nanowires. Micro and Nano Letters. 2016;**11**:34-37