We are IntechOpen, the world's leading publisher of Open Access books
Built by scientists, for scientists

6,900
Open access books available

186,000
International authors and editors

200M
Downloads

Our authors are among the

154
Countries delivered to

TOP 1%
most cited scientists

12.2%
Contributors from top 500 universities

CLARIVATE ANALYTICS
BOOK CITATION INDEX
INDEXED

WEB OF SCIENCE™

Selection of our books indexed in the Book Citation Index in Web of Science™ Core Collection (BKCI)

Interested in publishing with us?
Contact book.department@intechopen.com

Numbers displayed above are based on latest data collected.
For more information visit www.intechopen.com

11

Generalized Approach to Signal Processing in Wireless Communications: The Main Aspects and some Examples

Vyacheslav Tuzlukov
Kyungpook National University
South Korea

1. Introduction

The additive and multiplicative noise exists forever in any wireless communication system. Quality and integrity of any wireless communication systems are defined and limited by statistical characteristics of the noise and interference, which are caused by an electromagnetic field of the environment. The main characteristics of any wireless communication system are deteriorated as a result of the effect of the additive and multiplicative noise. The effect of addition of noise and interference to the signal generates an appearance of false information in the case of the additive noise. For this reason, the parameters of the received signal, which is an additive mixture of the signal, noise, and interference, differ from the parameters of the transmitted signal. Stochastic distortions of parameters in the transmitted signal, attributable to unforeseen changes in instantaneous values of the signal phase and amplitude as a function of time, can be considered as multiplicative noise. Under stimulus of the multiplicative noise, false information is a consequence of changed parameters of transmitted signals, for example, the parameters of transmitted signals are corrupted by the noise and interference. Thus, the impact of the additive noise and interference may be lowered by an increase in the signal-to-noise ratio (SNR). However, in the case of the multiplicative noise and interference, an increase in SNR does not produce any positive effects.

The main functional characteristics of any wireless communication systems are defined by an application area and are often specific for distinctive types of these systems. In the majority of cases, the main performance of any wireless communication systems are defined by some initial characteristics describing a quality of signal processing in the presence of noise: the precision of signal parameter measurement, the definition of resolution intervals of the signal parameters, and the probability of error.

The main idea is to use the generalized approach to signal processing (GASP) in noise in wireless communication systems (Tuzlukov, 1998; Tuzlukov, 1998; Tuzlukov, 2001; Tuzlukov, 2002; Tuzlukov, 2005; Tuzlukov, 2012). The GASP is based on a seemingly abstract idea: the introduction of an additional noise source that does not carry any information about the signal and signal parameters in order to improve the qualitative performance of wireless communication systems. In other words, we compare statistical data defining the statistical parameters of the probability distribution densities (pdfs) of the observed input stochastic samp-

les from two independent frequency-time regions – a "yes" signal is possible in the first region and it is known a priori that a "no" signal is obtained in the second region. The proposed GASP allows us to formulate a decision-making rule based on the determination of *the jointly sufficient statistics of the mean and variance* of the likelihood function (or functional). Classical and modern signal processing theories allow us to define *only the mean* of the likelihood function (or functional). Additional information about the statistical characteristics of the likelihood function (or functional) leads us to better quality signal detection and definition of signal parameters in compared with the optimal signal processing algorithms of classical or modern theories.

Thus, for any wireless communication systems, we have to consider two problems – analysis and synthesis. The first problem (analysis) – the problem to study a stimulus of the additive and multiplicative noise on the main principles and performance under the use of GASP – is an analysis of impact of the additive and multiplicative noise on the main characteristics of wireless communication systems, the receivers in which are constructed on the basis of GASP. This problem is very important in practice. This analysis allows us to define limitations on the use of wireless communication systems and to quantify the additive and multiplicative noise impact relative to other sources of interference present in these systems. If we are able to conclude that the presence of the additive and multiplicative noise is the main factor or one of the main factors limiting the performance of any wireless communication systems, then the second problem – the definition of structure and main parameters and characteristics of the generalized detector or receiver (GD or GR) under a dual stimulus of the additive and multiplicative noise – the problem of synthesis – arises.

GASP allows us to extend the well-known boundaries of the potential noise immunity set by classical and modern signal processing theories. Employment of wireless communication systems, the receivers of which are constructed on the basis of GASP, allows us to obtain high detection of signals and high accuracy of signal parameter definition with noise components present compared with that systems, the receivers of which are constructed on the basis of classical and modern signal processing theories. The optimal and asymptotic optimal signal processing algorithms of classical and modern theories, for signals with amplitude-frequency-phase structure characteristics that can be known and unknown a priori, are constituents of the signal processing algorithms that are designed on the basis of GASP.

2. GASP: Brief description

GASP is based on the assumption that the frequency-time region Z of the noise exists where a signal may be present; for example, there is an observed stochastic sample from this region, relative to which it is necessary to make the decision a "yes" signal (the hypothesis H_1) or a "no" signal (the hypothesis H_0). We now proceed to modify the initial premises of the classical and modern signal processing theories. Let us suppose there are two independent frequency-time regions Z and Z^* belonging to the space A. Noise from these regions obeys the same pdf with the same statistical parameters (for simplicity of considerations). Generally, these parameters are differed. A "yes" signal is possible in the noise region Z as before. *It is known a priori that a "no" signal is obtained in the noise region* Z^*. It is necessary to make the decision a "yes" signal (the hypothesis H_1) or a "no" signal (the hypothesis H_0) in the observed stochastic sample from the region Z, by comparing statistical parameters of pdf of this

sample with those of the sample from the reference region Z^*. Thus, there is a need to accumulate and compare statistical data defining the statistical parameters of pdf of the observed input stochastic samples from two independent frequency-time regions Z and Z^*. If statistical parameters for two samples are equal or agree with each other within the limits of a given before accuracy, then the decision of a "no" signal in the observed input stochastic process $X_1,\ldots,X_N$ is made – the hypothesis H_0. If the statistical parameters of pdf of the observed input stochastic sample from the region Z differ from those of the reference sample from the region Z^* by a value that exceeds the prescribed error limit, then the decision of a "yes" signal in the region Z is made – the hypothesis H_1.

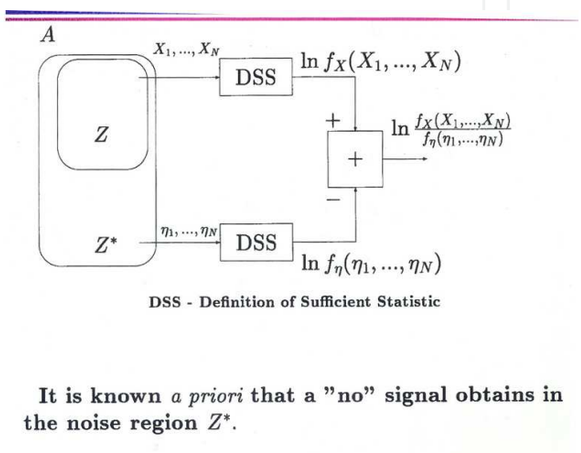

Fig. 1. Definition of sufficient statistics under GASP.

The simple model of GD in form of block diagram is represented in Fig.2. In this model, we use the following notations: MSG is the model signal generator (the local oscillator), the AF is the additional filter (the linear system) and the PF is the preliminary filter (the linear system) A detailed discussion of the AF and PF can be found in (Tuzlukov, 2001 and Tuzlukov, 2002).

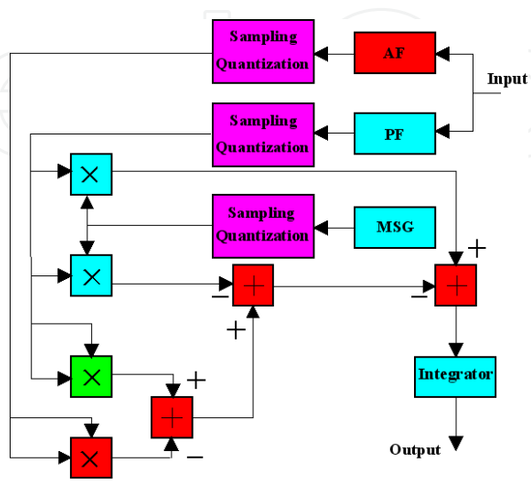

Fig. 2. Principal flowchart of GD.

Consider briefly the main statements regarding the AF and PF. There are two linear systems at the GD front end that can be presented, for example, as bandpass filters, namely, the PF with the impulse response $h_{PF}(\tau)$ and the AF with the impulse response $h_{AF}(\tau)$. For simplicity of analysis, we think that these filters have the same amplitude-frequency responses and bandwidths. Moreover, a resonant frequency of the AF is detuned relative to a resonant frequency of PF on such a value that signal cannot pass through the AF (on a value that is higher the signal bandwidth). Thus, the signal and noise can be appeared at the PF output and *the only noise* is appeared at the AF output. It is well known, if a value of detuning between the AF and PF resonant frequencies is more than $4 \div 5\Delta f_a$, where Δf_a is the signal bandwidth, the processes forming at the AF and PF outputs can be considered as independent and uncorrelated processes (in practice, the coefficient of correlation is not more than 0.05). In the case of signal absence in the input process, the statistical parameters at the AF and PF outputs will be the same, because the same noise is coming in at the AF and PF inputs, and we may think that the AF and PF do not change the statistical parameters of input process, since they are the linear GD front end systems.

By this reason, the AF can be considered as a generator of reference sample with *a priori* information *a "no" signal is obtained in the additional reference noise* forming at the AF output. There is a need to make some comments regarding the noise forming at the PF and AF outputs. If the Gaussian noise $n(t)$ comes in at the AF and PF inputs (the GD linear system front end), the noise forming at the AF and PF outputs is Gaussian, too, because the AF and PF are the linear systems and, in a general case, take the following form:

$$n_{PF}(t) = \int_{-\infty}^{\infty} h_{PF}(\tau) n(t-\tau) d\tau \quad \text{and} \quad n_{AF}(t) = \int_{-\infty}^{\infty} h_{AF}(\tau) n(t-\tau) d\tau \,. \tag{1}$$

If, for sake of simplicity, the additive white Gaussian noise (AWGN) with zero mean and two-sided power spectral density $2N_0$ is coming in at the AF and PF inputs (the GD linear system front end), then the noise forming at the AF and PF outputs is Gaussian with zero mean and variance given by $\sigma_n^2 = \frac{2N_0\omega_0^2}{8\Delta_F}$ (Tuzlukov, 2002) where in the case if AF (or PF) is the RLC oscillatory circuit, the AF (or PF) bandwidth Δ_F and resonance frequency ω_0 are defined in the following manner $\Delta_F = \pi\beta$, $\omega_0 = \frac{1}{\sqrt{LC}}, \beta = \frac{R}{2L}$ .The main functioning condition of GD is an equality over the whole range of parameters between the model signal $u^*(t)$ at the GD MSG output and the transmitted signal $u(t)$ forming at the GD input liner system (the PF) output, i.e. $u(t) = u^*(t)$. How we can satisfy this condition in practice is discussed in detail in (Tuzlukov, 2002; Tuzlukov, 2012). More detailed discussion about a choice of PF and AF and their impulse responses is given in (Tuzlukov, 1998).

3. Diversity problems in wireless communication systems with fading

In the design of wireless communication systems, two main disturbance factors are to be properly accounted for, i.e. fading and additive noise. As to the former, it is usually taken into account by modeling the propagation channel as a linear-time-varying filter with random impulse response (Bello, 1963 & Proakis, 2007). Indeed, such a model is general enough to encompass the most relevant instances of fading usually encountered in practice, i.e.

frequency- and/or time-selective fading, and flat-flat fading. As to the additive noise, such a disturbance has been classically modeled as a possibly correlated Gaussian random process.

However, the number of studies in the past few decades has shown, through both theoretical considerations and experimental results, that Gaussian random processes, even though they represent a faithful model for the thermal noise, are largely inadequate to model the effect of real-life noise processes, such as atmospheric and man-made noise (Kassam, 1988 & Webster, 1993) arising, for example, in outdoor mobile communication systems. It has also been shown that non-Gaussian disturbances are commonly encountered in indoor environments, for example, offices, hospitals, and factories (Blankenship & Rappaport, 1993), as well as in underwater communications applications (Middleton, 1999). These disturbances have an impulsive nature, i.e. they are characterized by a significant probability of observing large interference levels.

Since conventional receivers exhibit dramatic performance degradations in the presence of non-Gaussian impulsive noise, a great attention has been directed toward the development of non-Gaussian noise models and the design of optimized detection structures that are able to operate in such hostile environments. Among the most popular non-Gaussian noise models considered thus far, we cite the alpha-stable model (Tsihrintzis & Nikias, 1995), the Middleton Class-A and Class-B noise (Middleton, 1999), the Gaussian-mixture model (Garth & Poor, 1992) which, in turn, is a truncated version, at the first order, of the Middleton Class-A noise, and the compound Gaussian model (Conte et al., 1995). In particular, in the recent past, the latter model, subsuming, as special cases, many marginal probability density functions (pdfs) that have been found appropriate for modeling the impulsive noise, like, for instance, the Middleton Class-A noise, the Gaussian-mixture noise (Conte, 1995), and the symmetric alpha-stable noise (Kuruoglu, E. et al., 1998). They can be deemed as the product of a Gaussian, possibly complex random process times a real non-negative one.

Physically, the former component, which is usually referred to as speckle, accounts for the conditional validity of the central limit theorem, whereas the latter, the so-called texture process, rules the gross characteristics of the noise source. A very interesting property of compound-Gaussian processes is that, when observed on time intervals whose duration is significantly shorter than the average decorrelation time of the texture component, they reduce to spherically invariant random processes (SIRPs) (Yao, 1973), which have been widely adopted to model the impulsive noise in wireless communications (Gini, F et al., 1998), multiple access interference in direct-sequence spread spectrum cellular networks (Sousa, 1990), and clutter echoes in radar applications (Sangston & Gerlach, 1994).

We consider the problem of detecting one of M signals transmitted upon a zero-mean fading dispersive channel and embedded in SIRP noise by GD based on the GASP in noise. The similar problem has been previously addressed. In (Conte, 1995), the optimum receiver for flat-flat Rayleigh fading channels has been derived, whereas in (Buzzi et al., 1999), the case of Rayleigh-distributed, dispersive fading has been considered. It has been shown therein that the receiver structure consists of an estimator of the short-term conditional, i.e. given the texture component, noise power and of a bank of M estimators-correlators keyed to the estimated value of the noise power. Since such a structure is not realizable, a suboptimum detection structure has been introduced and analyzed in (Buzzi et al., 1997).

We design the GD extending conditions of (Buzzi et al., 1997) and (Buzzi et al., 1999) to the case that a diversity technique is employed. It is well known that the adoption of diversity techniques is effective in mitigating the negative effects of the fading, and since conventional diversity techniques can incur heavy performance loss in the presence of impulsive disturbance (Kassam & Poor, 1985), it is of interest to envisage the GD for optimized diversity reception in non-Gaussian noise. We show that the optimum GD is independent of the joint pdf of the texture components on each diversity branch. We also derive a suboptimum GD, which is amenable to a practice. We focus on the relevant case of binary frequency-shift-keying (BFSK) signaling and provide the error probability of both the optimum GD and the suboptimum GD. We assess the channel diversity order impact and noise spikiness on the performance.

3.1 Problem statement

The problem is to derive the GD aimed at detecting one out of M signals propagating through single-input multiple-output channel affected by dispersive fading and introducing the additive non-Gaussian noise. In other words, we have to deal with the following M-ary hypothesis test:

$$\boldsymbol{H}_i \Rightarrow \begin{cases} x_1(t) = s_{1,i}(t) + n_1(t) \\ \dots\dots\dots\dots\dots\dots \\ x_P(t) = s_{P,i}(t) + n_P(t) \end{cases} \qquad i = 1,\dots,M \quad t \in [0,T], \tag{2}$$

where P is the channel diversity order and $[0,T]$ is the observation interval; the waveforms $\{x_p(t)\}_{p=1}^{P}$ are the complex envelopes of the P distinct channel outputs; $\{s_{p,i}(t)\}_{p=1}^{P}, i = 1,\dots,M$ represent the baseband equivalents of the useful signal received on the P diversity branches under the ith hypothesis. Since the channel is affected by dispersive fading, we may assume (Proakis, 2007) that these waveforms are related to the corresponding transmitted signals $u_i(t)$

$$s_{p,i}(t) = \int_{-\infty}^{\infty} h_p(t,\tau) u_i(t-\tau) d\tau \quad , \qquad t \in [0,T] \tag{3}$$

where $h_p(t,\tau), p = 1,\dots,P$ is the random impulse response of the channel pth diversity branch and is modeled as a Gaussian random process with respect to the variable t. In keeping with the uncorrelated-scattering model, we assume that the random processes $h_p(t,\tau), p = 1,\dots,P$ are all statistically independent; as a consequence, the waveforms $\{s_{p,i}(t)\}_{p=1}^{P}$ are themselves independent complex Gaussian random processes that we assume to be zero-mean and with the covariance function

$$Cov(t,\tau) = E[s_{p,i}(t) s_{p,i}^*(\tau)] \quad , \qquad i = 1,\dots,M \quad t,\tau \in [0,T] \tag{4}$$

independent of p (the channel correlation properties are identical of each branch) and upper bounded by a finite positive constant. This last assumption poses constraint on the average receive energy in the i-th hypothesis $\boldsymbol{E}_i = \int_0^T Cov_i(t,t) dt < \infty$. We also assume in keeping with

the model (Van Trees, 2001) that $E[s_{p,i}(t)s_{p,i}(\tau)]=0$. This is not a true limitation in most practical instances, and it is necessarily satisfied if the channel is wide sense stationary. Finally, as to the additive non-Gaussian disturbances $\{n_p(t)\}_{p=1}^{P}$, we resort to the widely adopted compound model, i.e. we deem the waveform $n_p(t)$ as the product of two independent processes:

$$n_p(t)=v_p(t)g_p(t) \quad , \qquad p=1,\ldots,P \tag{5}$$

where $v_p(t)$ is a real non-negative random process with marginal pdf $f_{v_p}(\cdot)$ and $g_p(t)$ is a zero-mean complex Gaussian process. If the average decorrelation time of $v_p(t)$ is much larger than the observation interval $[0,T]$, then the disturbance process degenerates into SIPR (Yao, 1973)

$$n_p(t)=v_p g_p(t) \quad , \qquad p=1,\ldots,P \ . \tag{6}$$

From now on, we assume that such a condition is fulfilled, and we refer to (Conte, 1995) for further details on the noise model, as well as for a list of all of the marginal pdfs that are compatible with (5). Additionally, we assume $E[v_p^2]=1$ and that the correlation function of the random process $g_p(t)$ is either known or has been perfectly estimated based on (5). While previous papers had assumed that the noise realization $n_1(t),\ldots,n_P(t)$ were statistically independent, in this paper, this hypothesis is relaxed. To be more definite, we assume that the Gaussian components $g_1(t),\ldots,g_P(t)$ are uncorrelated (independent), whereas the random variables $v_1,\ldots,v_P$ are arbitrary correlated. We thus denote by $f_{v_1,\ldots,v_P}(v_1,\ldots,v_P)$ their joint pdf. It is worth pointing out that the above model subsumes the special case that the random variables $v_1,\ldots,v_P$ are either statistically independent or fully correlated, i.e. $v_1=\cdots=v_P$. Additionally, it permits modeling a much wider class of situations that may occur in practice. For instance, if one assumes that the P diversity observations are due to a temporal diversity, it is apparent that if the temporal distance between consecutive observations is comparable with the average decorrelation time of the process $v(t)$, then the random variables $v_1,\ldots,v_P$ can be assumed to be neither independent nor fully correlated. Such a model also turns out to be useful in clutter modeling in that if the diversity observations are due to the returns from neighboring cells, the corresponding texture components may be correlated (Barnard & Weiner, 1996). For sake of simplicity, consider the white noise case, i.e. $n_p(t)$ possesses an impulsive covariance $\forall p$

$$Cov_n(t,\tau)=2N_0E[v_p^2]\delta(t-\tau)=2N_0\delta(t-\tau) \ , \tag{7}$$

where $2N_0$ is the power spectral density (PSD) of the Gaussian component of the noise processes $g_1(t),\ldots,g_P(t)$. Notice that this last assumption does not imply any loss of generality should the noise possess a non-impulsive correlation Then, due to the closure of SIRP with respect to linear transformations, the classification problem could be reduced to the above form by simply preprocessing the observables through a linear whitening filter. In such a situation, the $s_{p,i}(t)$ represent the useful signals at the output of the cascade of the channel and of the whitening filter. Due to the linearity of such systems, they are still Gaussian processes with known covariance functions. Finally, we highlight here that the assumption that

the useful signals and noise covariance functions (3) and (6) are independent of the index p has been made to simplify notation.

3.2 Synthesis and design

3.2.1 Optimum GD structure design

Given the M-ary hypothesis test (1), the synthesis of the optimum GD structure in the sense of attaining the minimum probability of error P_E requires evaluating the likelihood functionals under any hypothesis and adopting a maximum likelihood decision-making rule. Formally, we have

$$\hat{H} = H_i \Rightarrow \Lambda[\mathbf{x}(t); H_i] > \max_{k \neq i} \Lambda[\mathbf{x}(t); H_k] \tag{8}$$

with $\mathbf{x}(t) = [x_1(t), \ldots, x_P(t)]^T$. The above functionals are usually evaluated through a limiting procedure. We evaluate the likelihood $f_{\mathbf{x}_Q|H_i}(\mathbf{x}_Q)$ of the Q-dimensional random vector $\mathbf{x} = [x_1, \ldots, x_Q]^T$ whose entries are the projections of the received signal along the first Q elements of suitable basis B_i . Therefore, the likelihood functional corresponding to H_i is

$$\Lambda[\mathbf{x}(t); H_i] = \lim_{Q \to \infty} \frac{f_{\mathbf{x}_Q|H_i}(\mathbf{x}_Q)}{f_{\mathbf{n}_{AF_Q}}(\mathbf{n}_{AF_Q})}, \tag{9}$$

where $f_{\mathbf{n}_{AF_Q}}(\mathbf{n}_{AF_Q})$ is the likelihood corresponding to the reference sample with *a priori* information a "no" signal is obtained in the additional reference noise forming at the AF output, i.e. no useful signal is observed at the P channel outputs. In order to evaluate the limit (9), we resort to a different basis for each hypothesis. We choose for the i-th hypothesis the Karhunen-Loeve basis B_i determined by the covariance function of the useful received signal under the hypothesis H_i . Projecting the waveform received on the p-th diversity branch along the first N axes of the i-th basis yields the following N-dimensional vector:

$$\mathbf{x}^i_{N,p} = \mathbf{s}^i_{N,p} + \nu_p \mathbf{g}^i_{N,p} \quad , \qquad p = 1, \ldots, P \tag{10}$$

where $\mathbf{s}^i_{N,p}$ and $\mathbf{g}^i_{N,p}$ are the corresponding projections of the waveforms $s_{p,i}(t)$ and $g_p(t)$. Since B_i is the Karhunen-Loeve basis for the random processes $s_{1,i}(t), \ldots, s_{P,i}(t)$, the entries of $\mathbf{s}^i_{N,p}$ are a sequence of uncorrelated complex Gaussian random variables with the variances $\left(\sigma^2_{s_{1,i}}, \ldots, \sigma^2_{s_{N,i}}\right)$ which are the first N eigenvalues of the covariance function $Cov_i(t,u)$, whereas the entries of $\mathbf{g}_{N,p}$ are a sequence of uncorrelated Gaussian variables with variance $2N_0$. Here we adopt the common approach of assuming that any complete orthonormal system is an orthonormal basis for white processes (Conte, 1995 and Poor, 1988). Upon defining the following NP-dimensional vector

$$\mathbf{x}^i_N = \left[\mathbf{x}^{iT}_{N,1}, \mathbf{x}^{iT}_{N,2}, \ldots, \mathbf{x}^{iT}_{N,P}\right]^T \tag{11}$$

the likelihood functional taking into consideration subsection 3.1 and (Tuzlukov, 2001) can be written in the following form

$$\Lambda[\mathbf{x}_N^i;\boldsymbol{H}_i]=\frac{f_{\mathbf{x}_N^i|\boldsymbol{H}_i}\left(\mathbf{x}_N^i\right)}{f_{\mathbf{n}_{AF_N}^i|\boldsymbol{H}_0}\left(\mathbf{n}_{AF_N}^i\right)}=\frac{\int\prod_{p=1}^{P}\prod_{j=1}^{N}\frac{1}{\sigma_{s_{j,i}}^2+4\sigma_n^4y_p^2}\exp\left[-\frac{|x_{j,p}^i|^2}{\sigma_{s_{j,i}}^2+4\sigma_n^4y_p^2}\right]f_{\mathbf{v}}(\mathbf{y})d\mathbf{y}}{\int\prod_{p=1}^{P}\frac{1}{\left(4\sigma_n^4y_p^2\right)^N}\exp\left[-\frac{|\mathbf{n}_{AF_{j,p}}^i|^2}{4\sigma_n^4y_p^2}\right]f_{\mathbf{v}}(\mathbf{y})d\mathbf{y}}, \tag{12}$$

where $x_{j,p}^i$ is the j-th entry of the vector $\mathbf{x}_{N,p}^i$, the integrals in (12) are over the set $[0,\infty)^P$, $\mathbf{v}=[v_1,\ldots,v_P]$, $\mathbf{y}=[y_1,\ldots,y_P]$, and $d\mathbf{y}=\prod_{i=1}^{P}dy_i$. The convergence in measure of (12) for increasing N to the likelihood functional $\Lambda[\mathbf{x}(t);\boldsymbol{H}_i]$ is ensured by the Grenander theorem (Poor, 1988). In order to evaluate the above functional, we introduce the substitution

$$y_p=\frac{\left\|\mathbf{x}_{N,p}^i\right\|}{\sqrt{4\sigma_n^4z_p}}\quad,\qquad p=1,2,\ldots,P \tag{13}$$

where $\|\ \|$ denotes the Euclidean norm. Applying the same limiting procedure as in (Buzzi, 1999), we come up with the following asymptotical expression:

$$\Lambda[\mathbf{x}(t);\boldsymbol{H}_i]=\lim_{N\to\infty}\prod_{p=1}^{P}\Lambda_{gN}^p\left[\mathbf{x}_{N,p}^i,\frac{\left\|\mathbf{x}_{N,p}^i\right\|^2}{4\sigma_n^4N};\boldsymbol{H}_i\right], \tag{14}$$

where

$$\Lambda_{gN}^p\left(\mathbf{x}_{N,p}^i,y_p^2;\boldsymbol{H}_i\right)=\exp\left\{\sum_{j=1}^{N}\left[\frac{\sigma_{s_{j,i}}^2|x_{j,p}^i|^2}{4\sigma_n^4y_p^2(\sigma_{s_{j,i}}^2+4\sigma_n^4y_p^2)}-\ln\left(1+\frac{\sigma_{s_{j,i}}^2}{4\sigma_n^4y_p^2}\right)\right]\right\} \tag{15}$$

represents the ratio between the conditional likelihoods for $\boldsymbol{H}_i$ and $\boldsymbol{H}_0$ based on the observation of the signal received on the p-th channel output only. Equation (14) also requires evaluating

$$Z_p=\lim_{N\to\infty}\frac{\left\|\mathbf{x}_{N,p}^i\right\|^2}{N}, \tag{16}$$

that, following in (Buzzi, 1999), can be shown to converge in the mean square sense to the random variable $4\sigma_n^4v_p^2$ for any of the Karhunen-Loeve basis $\boldsymbol{B}_i, i=1,\ldots,M$. Due to the fact that the considered noise is white, this result also holds for the large signal-to-noise ratios even though, in this case, a large number of summands is to be considered in order to achieve a given target estimation accuracy. Notice also that $4\sigma_n^4v_p^2$ can be interpreted as a short-term noise power spectral density (PSD), namely, the PSD that would be measured on sufficiently short time intervals on the p-th channel output. Thus, the classification problem under study admits the sufficient statistics

$$\ln \Lambda[\mathbf{x}(t);\boldsymbol{H}_i] = \sum_{p=1}^{P}\sum_{j=1}^{\infty}\left[\frac{\sigma_{s_{j,i}}^2 \left| x_{j,p}^i \right|^2}{Z_p\left(\sigma_{s_{j,i}}^2 + Z_p\right)} - \ln\left(1+\frac{\sigma_{s_{j,i}}^2}{Z_p}\right)\right]. \tag{17}$$

The above equations demonstrate that the optimum GD structure for the problem given in (1) is completely canonical in that for any $f_{\nu_1,\ldots,\nu_P}(\nu_1,\ldots,\nu_P)$ and, for any noise model in the class of compound-Gaussian processes and for any correlation of the random variables ν_1, $\ldots,\nu_P$, the likelihood functional is one and the same. Equation (17) can be interpreted as a bank of P estimator-GDs (Van Trees, 2003) plus a bias term depending on the eigenvalues of the signal correlation under the hypothesis $\boldsymbol{H}_i$. The optimum test based on GASP can be written in the following form:

$$\begin{aligned}\hat{\boldsymbol{H}} = \boldsymbol{H}_i \Rightarrow \sum_{p=1}^{P}\frac{1}{Z_p}\left\{\int_0^T [2x_p(t)\hat{s}_{p,i}^*(t) - x_p(t)x_p(t-\tau)]dt + \int_0^T n_{AF_p}^2(t)dt\right\} - b_{p,i} \\ > \sum_{p=1}^{P}\frac{1}{Z_p}\left\{\int_0^T [2x_p(t)\hat{s}_{p,k}^*(t) - x_p(t)x_p(t-\tau)]dt + \int_0^T n_{AF_p}^2(t)dt\right\} - b_{p,k} \quad , \qquad \forall k \neq i\end{aligned} \tag{18}$$

where $\hat{s}_{p,i}(t)$ is the linear minimum mean square estimator of $s_{p,i}(t)$ embedded in white noise with PSD Z_p, namely,

$$\hat{s}_{p,i}(t) = \int_0^T h_{p,i}(t,u)x_p(u)du \ , \tag{19}$$

where $h_{p,i}(t,u)$ is the solution to the Wiener-Hopf equation

$$\int_0^T Cov_i(t,z)h_{p,i}(z,\tau)dz + Z_p h_{p,i}(t,\tau) = Cov_i(t,\tau) \ . \tag{20}$$

As to the bias terms $b_{p,i}$, they are given by

$$b_{p,i} = \sum_{j=1}^{\infty}\ln\left[1+\frac{\sigma_{s_{j,i}}^2}{Z_p}\right] \qquad i = 1,\ldots,M \quad \text{and} \quad p = 1,\ldots,P \ . \tag{21}$$

The block diagram of the corresponding GD is outlined in Fig.3. The received signals $x_1(t)$, $\ldots,x_P(t)$ are fed to P estimators of the noise short-term PSD, which are subsequently used for synthesizing the bank of MP minimum mean square error filters $h_{p,i}(\cdot,\cdot), \forall p = 1,\ldots,P, \forall i = 1,\ldots,M$ to implement the test (18). The newly proposed GD structure is a generalization, to the case of multiple observations, of that proposed in (Buzzi, 1999), to which it reduces to $P = 1$.

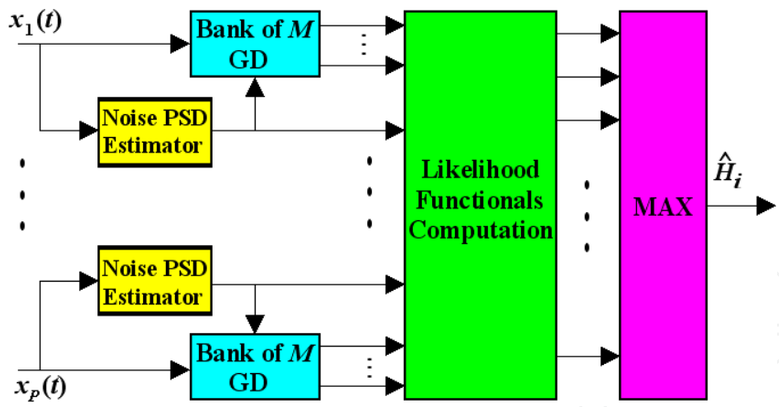

Fig. 3. Flowchart of optimum GD in compound Gaussian noise.

3.2.2 Suboptimal GD: Low energy coherence approach

Practical implementation of the decision rule (18) requires an estimation of the short-term noise PSDs on each diversity branch and evaluation of the test statistic. This problem requires a real-time design of MP estimator-GDs that are keyed to the estimated values of the short-term PSDs. This would require a formidable computational effort, which seems to prevent any practical implementation of the new receiving structure. Accordingly, we develop an alternative suboptimal GD structure with lower complexity. Assume that the signals $\{s_{p,i}(t) : \forall p = 1,\ldots,P, \forall i = 1,\ldots,M\}$ possess a low degree of coherence, namely, that their energy content is spread over a large number of orthogonal directions. Since

$$\bar{E}_i = \sum_{j=1}^{+\infty} \sigma^2_{s_{j,i}} \ , \tag{22}$$

The low degree of coherence assumption implies that the covariance functions $Cov_i(t,\tau)$ have a large number of nonzero eigenvalues and do not have any dominant eigenvalue. Under these circumstances, it is plausible to assume that the following low energy coherence condition is met:

$$\sigma^2_{s_{j,i}} << 2N_0 \qquad i = 1,\ldots,M \qquad j = 1,2,\ldots \tag{23}$$

If this is the case, we can approximate the log-likelihood functional (17) with its first-order McLaurin series expansion with starting point $\sigma^2_{s_{j,i}} / Z_p = 0$. Following the same steps as in (Buzzi, 1997), we obtain the following suboptimal within the limits GASP decision-making rule:

$$\begin{aligned} \hat{H} = H_i \Rightarrow & \sum_{p=1}^{P} \frac{1}{Z_p^2} \left\{ \int_0^T \int_0^T x_p(t) x_p^*(\tau) Cov_i(t,\tau) dt d\tau + \int_0^T n^2_{AF_p}(t) dt \right\} - \frac{\bar{E}_i}{Z_p} \\ > & \sum_{p=1}^{P} \frac{1}{Z_p^2} \left\{ \int_0^T \int_0^T x_p(t) x_p^*(\tau) Cov_k(t,\tau) dt d\tau + \int_0^T n^2_{AF_p}(t) dt \right\} - \frac{\bar{E}_k}{Z_p} \qquad \forall k \neq i \ . \end{aligned} \tag{24}$$

The new GD again requires estimating the short-term noise PSDs $Z_1,\ldots,Z_P$. Unlike the optimum GD (18), in the suboptimum GD (24), the MP minimum mean square error filters $h_{p,i}(\cdot,\cdot), \forall p=1,\ldots,P, \forall i=1,\ldots,M$ whose impulse responses depend on $Z_1,\ldots,Z_P$ through (20) are now replaced with M filters whose impulse response $Cov_i(t,\tau)$ is independent of the short-term noise PSDs realizations, which now affect the decision-making rule as mere proportionality factors. The only difficulty for practical implementation of such a GD scheme is the short-term noise PSD estimation through (16). However, as already mentioned, such a drawback can be easily circumvented by retaining only a limited number of summands.

3.3 Special cases

3.3.1 Channels with flat-flat Rayleigh fading

Let us consider the situation where the fading is slow and non-selective so that the signal observed on the p-th channel output under the hypothesis $\boldsymbol{H}_i$ takes the form

$$s_{p,i}(t) = A_p \exp\{j\theta_p\} u_i(t) \,, \tag{25}$$

where $A_p \exp\{j\theta_p\}$ is a complex zero-mean Gaussian random variable. The signal covariance function takes a form:

$$Cov_i(t,\tau) = \bar{\boldsymbol{E}}_i u_i(t) u_i^*(\tau) \,, \tag{26}$$

where the assumption has been made that $u_i(t)$ possesses unity norm. Notice that this equation represents the Mercer expansion of the covariance in a basis whose first unit vector is parallel to $u_i(t)$. It should be noted that since the Mercer expansion of the useful signal covariance functions contains just one term, the low energy coherence condition is, in this case, equivalent to a low SNR condition. It thus follows that the low energy coherence GD can be now interpreted as a locally optimum GD, thus implying that for large SNRs, its performance is expectedly much poorer than that of the optimum GD. The corresponding eigenvalues are

$$\sigma^2_{s_{1,i}} = \bar{\boldsymbol{E}}_i \;\;, \quad \sigma^2_{s_{k,i}} = 0 \;\;, \quad \forall k \neq 1 \,. \tag{27}$$

Accordingly, the minimum mean square error filters to be substituted in (18) have the following impulse responses:

$$h_{p,i}(t,\tau) = \frac{\bar{\boldsymbol{E}}_i}{\bar{\boldsymbol{E}}_i + Z_p} u_i(t) u_i^*(\tau) \,, \tag{28}$$

where the bias term is simply $b_{p,i} = \ln\left\{1 + \frac{\bar{\boldsymbol{E}}_i}{Z_p}\right\}$ .We explicitly notice here that such a bias term turns out to depend on the estimated PSD Z_p . Substituting into (18), we find the optimum test

$$\hat{\boldsymbol{H}} = \boldsymbol{H}_i \Rightarrow \sum_{p=1}^{P} \frac{\bar{\boldsymbol{E}}_i}{Z_p(\bar{\boldsymbol{E}}_i + Z_p)} \left| \int_0^T [2x_p(t)u_i^*(t) - x_p(t)x_p(t-\tau)]dt + \int_0^T n^2_{AF_p}(t)dt \right|^2 - b_{p,i}$$

$$> \max_{k \neq i} \sum_{p=1}^{P} \frac{\bar{E}_k}{Z_p(\bar{E}_k + Z_p)} \left| \int_0^T [2x_p(t)u_k^*(t) - x_p(t)x_p(t-\tau)]dt + \int_0^T n_{AF_p}^2(t)dt \right|^2 - b_{p,k} \,, \tag{29}$$

whereas its low energy coherence suboptimal approximation can be written in the following form:

$$\begin{aligned} \hat{H} = H_i \Rightarrow \sum_{p=1}^{P} \frac{1}{Z_p^2} \left| \int_0^T [2x_p(t)u_i^*(t) - x_p(t)x_p(t-\tau)]dt + \int_0^T n_{AF_p}^2(t)dt \right|^2 - \frac{\bar{E}_i}{Z_p} \\ > \max_{k \neq i} \sum_{p=1}^{P} \frac{1}{Z_p^2} \left| \int_0^T [2x_p(t)u_i^*(t) - x_p(t)x_p(t-\tau)]dt + \int_0^T n_{AF_p}^2(t)dt \right|^2 - \frac{\bar{E}_i}{Z_p} \,. \end{aligned} \tag{30}$$

It is worth pointing out that both GDs are akin to the "square-law combiner" (Tuzlukov, 2001) GD that is well known to be the optimum GD in GASP (Tuzlukov, 2005 and Tuzlukov, 2012) viewpoint for array signal detection in Rayleigh flat-flat fading channels and Gaussian noise. The relevant difference is due to the presence of short-term noise PSDs $Z_1, \ldots, Z_P$ which weigh the contribution from each diversity branch. In the special case of equienergy signals, the bias terms in the above decision-making rules end up irrelevant, and the optimum GD test (29) reduces to a generalization of the usual incoherent GD, with the exception that the decision statistic depends on the short-term noise PSD realizations.

3.3.2 Channels with slow frequency-selective Rayleigh fading

Now, assume that the channel random impulse response can be written in the following form:

$$\chi_p(t,\tau) = \chi_p(\tau) = \sum_{k=0}^{L-1} A_{p,k} \exp\{j\theta_{p,k}\} \delta(\tau - kW^{-1}) \,, \tag{31}$$

where $A_{p,k} \exp\{j\theta_{p,k}\}$ is a set of zero-mean, independent complex Gaussian random variables, and L is the number of paths. Equation (31) represents the well known taped delay line channel model, which is widely encountered in wireless mobile communications. It is readily shown that in such a case, the received useful signal, upon transmission of $u_i(t)$, has the following covariance function:

$$Cov_i(t,\tau) = \sum_{k=0}^{L-1} \overline{A_k^2} u_i(t - kW^{-1}) u_i^*(\tau - kW^{-1}) \,, \qquad i = 1, \ldots, M \tag{32}$$

where $\overline{A_k^2}$ is the statistical expectation (assumed independent of p) of the random variables $A_{p,k}^2$. These correlations admit L nonzero eigenvalues, and a procedure for evaluating their eigenvalues and eigenfunctions can be found in (Matthews, 1992). In the special case that the L paths are resolvable, i.e. $T \leq W^{-1}$, the optimum GD (18) assumes the following simplified form:

$$\hat{H} = H_i \Rightarrow \sum_{p=1}^{P}\sum_{j=0}^{L-1}\left\{\frac{\overline{A_j^2}\left|\int_0^T x_p(t)u_i^*\left(t-jW^{-1}\right)dt+\int_0^T n_{AF_p}^2(t)dt\right|^2}{Z_p\left(Z_p+E_i\overline{A_j^2}\right)}-\ln\left\{1+\frac{E_i\overline{A_j^2}}{Z_p}\right\}\right\}$$

$$> \max_{k\neq i}\sum_{p=1}^{P}\sum_{j=0}^{L-1}\left\{\frac{\overline{A_j^2}\left|\int_0^T x_p(t)u_k^*\left(t-jW^{-1}\right)dt+\int_0^T n_{AF_p}^2(t)dt\right|^2}{Z_p\left(Z_p+E_k\overline{A_j^2}\right)}-\ln\left\{1+\frac{E_k\overline{A_j^2}}{Z_p}\right\}\right\}, \tag{33}$$

where $\overline{E}_i$ is the energy of the signal $u_i(t)$. The low energy coherence suboptimal GD (24) is instead written as

$$\hat{H} = H_i \Rightarrow \sum_{p=1}^{P}\sum_{j=0}^{L-1}\left\{\frac{\overline{A_j^2}}{Z_p^2}\left|\int_0^T x_p(t)u_i^*\left(t-jW^{-1}\right)dt+\int_0^T n_{AF_p}^2(t)dt\right|^2-\frac{E_i\overline{A_j^2}}{Z_p}\right\}$$

$$> \max_{k\neq i}\sum_{p=1}^{P}\sum_{j=0}^{L-1}\left\{\frac{\overline{A_j^2}}{Z_p^2}\left|\int_0^T x_p(t)u_k^*\left(t-jW^{-1}\right)dt+\int_0^T n_{AF_p}^2(t)dt\right|^2-\frac{E_k\overline{A_j^2}}{Z_p}\right\}. \tag{34}$$

Optimality of (33) obviously holds for one-short detection, namely, neglecting the intersymbol interference induced by the channel band limitedness.

3.4 Performance assessment

In this section, we focus on the performance of the proposed GD structures. A general formula to evaluate the probability of error P_E of any receiver in the presence of spherically invariant disturbance takes the following form:

$$P_E = \int P_E(e\,|\,\mathbf{v})f_{\mathbf{v}}(\mathbf{v})d\mathbf{v}\,, \tag{35}$$

where $P_E(e\,|\,\mathbf{v})$ is the receiver probability of error in the presence of Gaussian noise with PSD on the p-th diversity branch $2N_0v_p^2$. The problem to evaluate P_E reduces to that of first analyzing the Gaussian case and then carrying out the integration (35). In order to give an insight into the GD performance, we consider a BFSK signaling scheme, i.e. the baseband equivalents of the two transmitted waveforms are related as

$$u_2(t) = u_1(t)\exp\{j2\pi\Delta ft\}\,, \tag{36}$$

where $\Delta f = T^{-1}$ denotes the frequency shift. Even for this simple case study, working out an analytical expression for the probability of error of both the optimum GD and of its low energy coherence approximation is usually unwieldy even for the case of Gaussian noise. With

regard to the optimum GD structure, upper and lower bounds for the performance may be established via Chernoff-bounding techniques. Generalizing to the case of multiple observations, the procedure in (Van Trees, 2003), the conditional probability of error given $\nu_1,\ldots,\nu_P$ can be bounded as

$$\frac{\exp\{2\mu(0.5\,|\,\mathbf{v})\}}{2\left(1+\sqrt{0.25\pi\ddot{\mu}(0.5\,|\,\mathbf{v})}\right)} \le P_E(e\,|\,\mathbf{v}) \le \frac{\exp\{2\mu(0.5\,|\,\mathbf{v})\}}{2\left(1+\sqrt{0.25\pi\ddot{\mu}(0.5\,|\,\mathbf{v})}\right)}, \tag{37}$$

where $\mu(\cdot\,|\,\mathbf{v})$ is the following conditional semi-invariant moment generating the function

$$\begin{aligned}\mu(x\,|\,\mathbf{v}) &= \lim_{N\to\infty} \ln E\left\{\exp\left[x\sum_{p=1}^{P}\ln\Lambda_{gN}^{p}\left(\mathbf{x}_{N,p}^{i};\nu_p^2:H_1\right)\right]\,\middle|\,H_0,\mathbf{v}\right\} \\ &= \sum_{j=1}^{\infty}\sum_{p=1}^{P}\left\{(1-x)\ln\left[1+\frac{\sigma_{s_j}^2}{4\sigma_n^4\nu_p^2}\right]-\ln\left[1+\frac{\sigma_{s_j}^2(1-x)}{4\sigma_n^4\nu_p^2}\right]\right\}\end{aligned} \tag{38}$$

with $\{\sigma_{s_j}^2\}_{j=1}^{\infty}$ being the set of common eigenvalues. Substituting this relationship into (37) and averaging with respect to $\nu_1,\ldots,\nu_P$ yields the unconditional bounds on the probability of error for the optimum GD (18).

3.5 Simulation results

To proceed further in the GD performance there is a need to assign both the marginal pdf, as well as the channel spectral characteristics. We assume hereafter the generalized Laplace noise, i.e. the marginal pdf of the p-th noise texture component takes the following form:

$$f_{\nu_p}(x) = \frac{2\nu^{\nu}}{\Gamma(\nu)}x^{2\nu-1}\exp\{-\nu x^2\}\ , \qquad x>0 \tag{39}$$

where ν is a shape parameter, ruling the distribution behavior. In particular, the limiting case $\nu\to\infty$ implies $f_{\nu_p}(x)=\delta(x-1)$ and, eventually, Gaussian noise, where increasingly lower values of ν account for increasingly spikier noise distribution. Regarding the channel, we consider the case of the frequency-selective, slowly fading channel, i.e. the channel random impulse response is expressed by (31), implying that the useful signal correlation is that given in (32). For simplicity, we also assume that the paths are resolvable. In the following plots the P_E is evaluated a) through a semianalytic procedure, i.e. by numerically averaging the Chernoff bound (37) with respect to the realizations of the $\nu_1,\ldots,\nu_P$, and b) by resorting to a Monte Carlo counting procedure. In this later case, the noise samples have been generated by multiplying standard, i.e. with zero-mean and unit-variance, complex Gaussian random variates times the random realizations of $\nu_1,\ldots,\nu_P$.

The Chernoff bound for the optimum GD versus the averaged received radio-frequency energy contrast that is defined as $\gamma_0 = P\sum_{j=1}^{L}\sigma_{s_j}^2(4\sigma_n^4)^{-0.5}$ at $P=2$ and for two values of the noise shape parameter ν is shown in Fig.4. The noise texture components have been assumed to be independent. Inspecting the curves, we see that the Chernoff bound provides a very reliable

estimate of the actual P_E, as the upper and lower bound very tightly follow each other. As expected, the results demonstrate that in the low P_E region, the spikier the noise, i.e. the lower ν, the worse the GD performance. Conversely, the opposite behavior is observed for small values of γ_0. This fact might appear, at a first look, surprising. It may be analytically justified in light of the local validity of Jensen's inequality (Van Trees, 2003) and is basically the same phenomenon that makes digital modulation schemes operating in Gaussian noise to achieve, for low values of γ_0, superior performance in Rayleigh flat-flat fading channels than in no-fading channels. Notice, this phenomenon is in accordance with that observed in (Conte 1995). In order to validate the Chernoff bound, we also show, on the same plots, some points obtained by Monte Carlo simulations. These points obviously lie between the corresponding upper and lower probability of error bounds. Additionally, we compare the GD Chernoff bound with that for the conventional optimum receiver (Buzzi et al., 2001). A superiority of GD structure is evident.

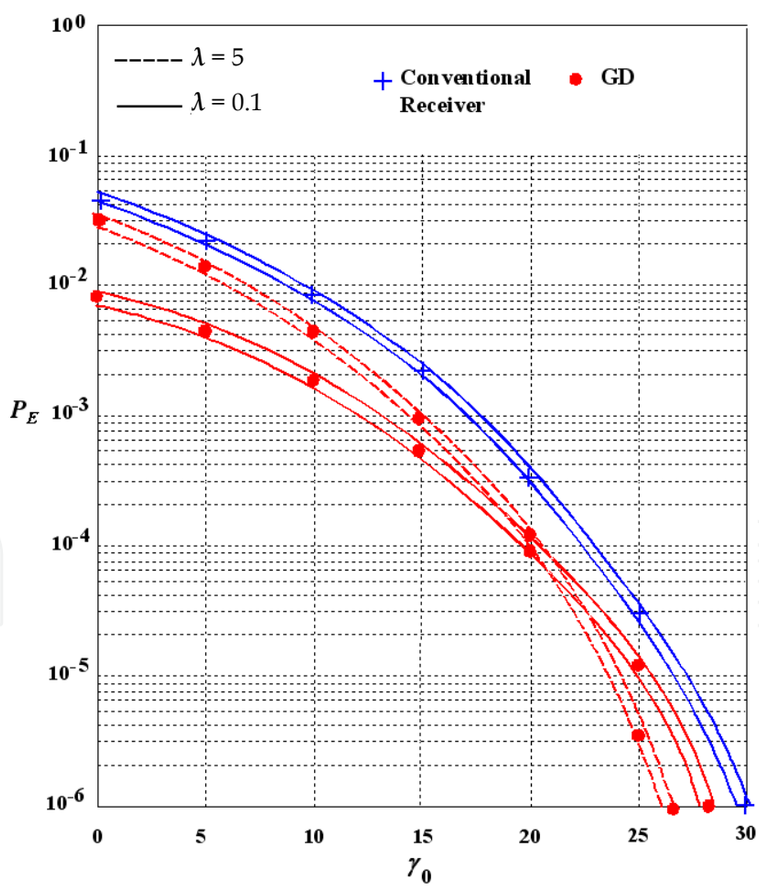

Fig. 4. Chernoff bounds for P_E of the optimum GD.

In Fig. 5, the effect of the channel diversity order is investigated. Indeed, the optimum GD performance versus γ_0 is represented for several values of P and with $\nu = 1$. The $Z_1, \ldots, Z_P$ have been assumed exponentially correlated with correlation coefficient $\rho = 0.2$. A procedure for generating these exponentially correlated random variables for integer and semi-integer values of ν is reported in (Lombardo et al., 1999). As expected, as P increases, the GD performance ameliorates, thus confirming that diversity represents a suitable means to restore performance in severely hostile scenarios. Also, we compare the GD performance with that for the conventional optimum receiver (Buzzi et al., 2001) and we see that the GD keeps superiority in this case, too.

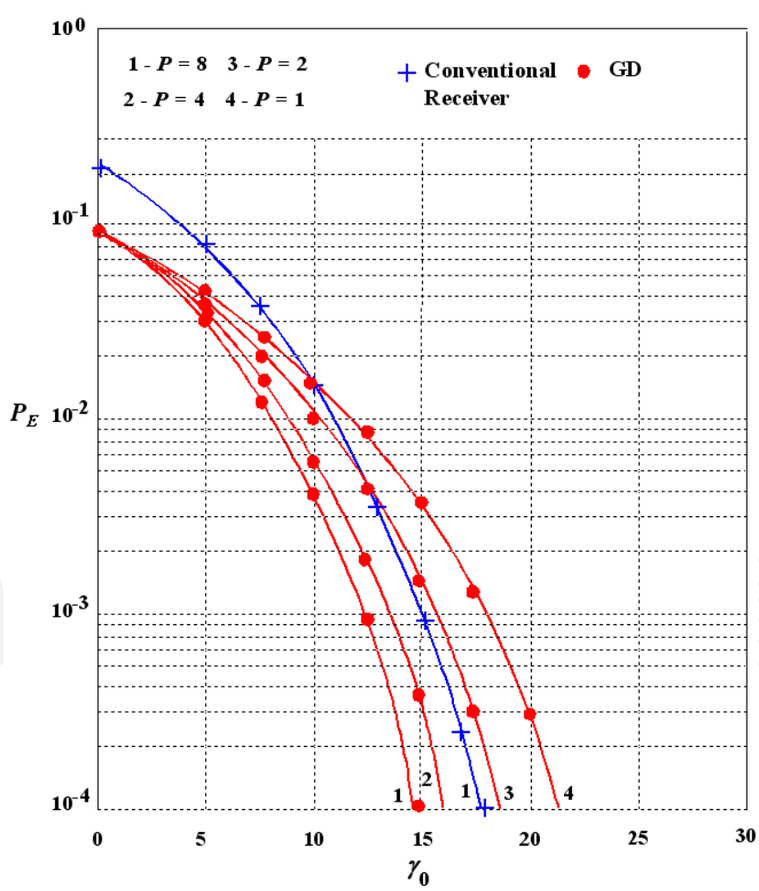

Fig. 5. P_E at several values of P.

The optimum GD performance versus γ_0 for the generalized Laplace noise at $\nu = 1, P = 4$ and for several values of the correlation coefficient ρ is demonstrated in Fig. 6. It is seen that the probability of error improves for vanishingly small ρ. For small ρ, the GD takes much advantage of the diversity observations. For high values of ρ, the realizations $Z_1, \ldots, Z_P$ are very similar and much less advantage can be gained through the adoption of a diversity strategy. Such GD performance improvement is akin to that observed in signal diversity detection in the presence of flat-flat fading and Gaussian noise. We see that the GD outperforms the conventional optimum receiver (Buzzi et al., 2001) by the probability of error.

In Fig. 7, we compare the optimum GD performance versus that of the low energy coherence GD. We assumed $\rho = 0.2$ and $P = 4$. It is seen that the performance loss incurred by the low energy coherence GD with respect to the optimum GD is kept within a fraction of 1 dB at $P_E = 10^{-4}$. Simulation results that are not presented in the paper show that the crucial factor ruling the GD performance is the noise shape parameter, whereas the particular noise distribution has a rather limited effect on the probability of error.

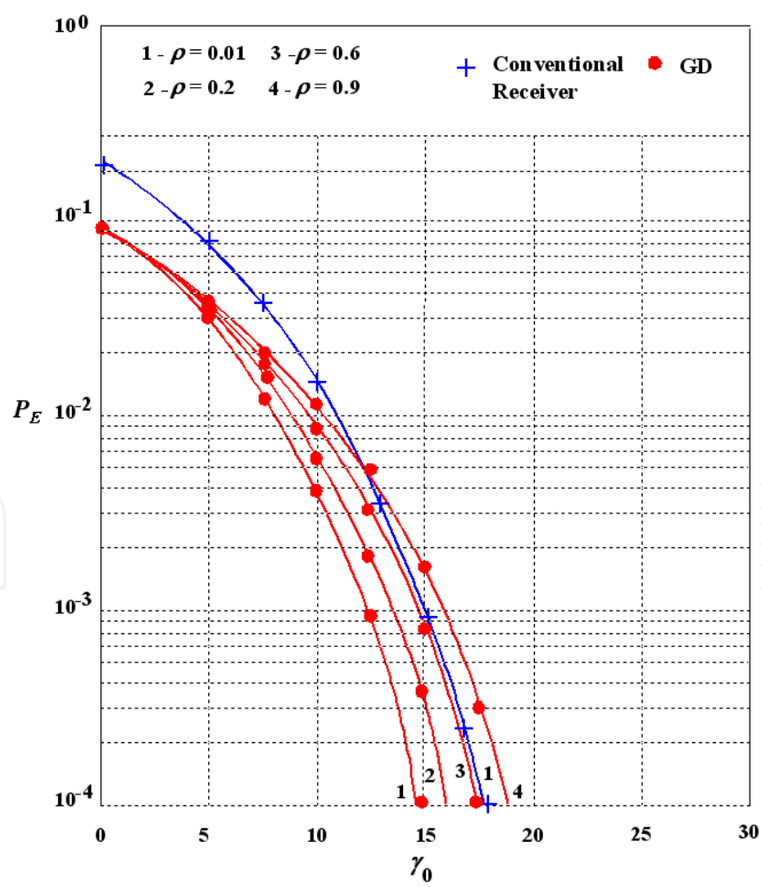

Fig. 6. P_E at several values of the correlation coefficient.

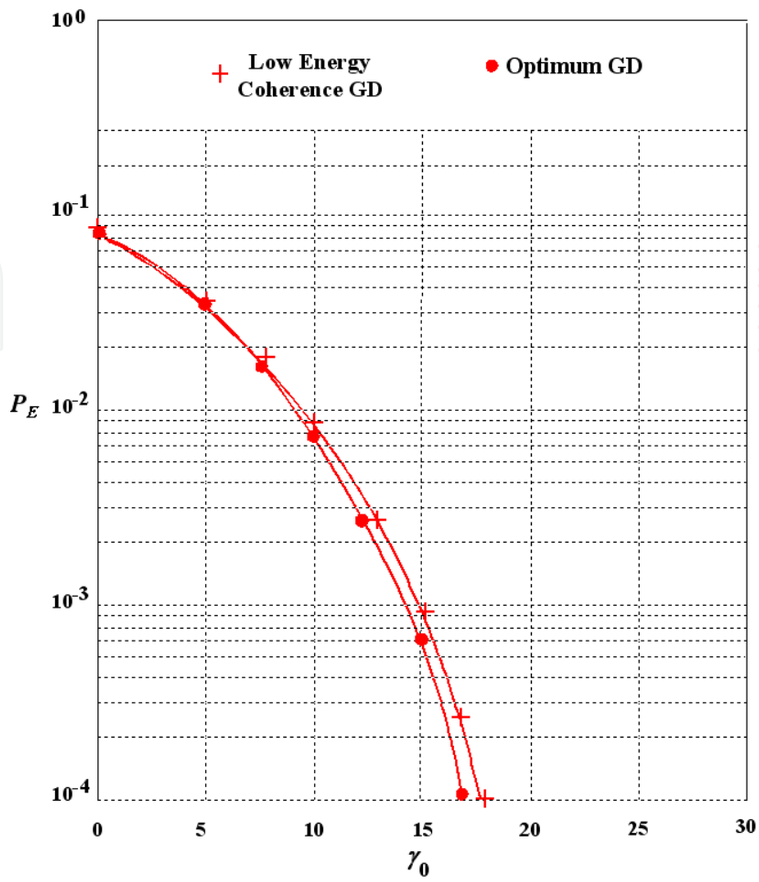

Fig. 7. P_E for the optimum and low energy coherence GDs.

3.6 Discussion

We have considered the problem of diversity detection of one out of M signals transmitted over a fading dispersive channel in the presence of non-Gaussian noise. We have modeled the additive noise on each channel diversity branch through a spherically invariant random process, and the optimum GD has been shown to be independent of the actual joint pdf of the noise texture components present on the channel diversity outputs. The optimum GD is similar to the optimum GD for Gaussian noise, where the only difference is that the noise PSD $2N_0$ is substituted with a perfect estimate of the short-term PSD realizations of the impulsive additive noise. We also derived a suboptimum GD matched with GASP based on the low energy coherence hypothesis. At the performance analysis stage, we focused on frequency-selective slowly fading channels and on a BFSK signaling scheme and evaluated the GD performance through both a semianalytic bounding technique and computer simulations. Numerical results have shown that the GD performance is affected by the average received energy contrast, by the channel diversity order, and by the noise shape parameter, whereas it is only marginally affected by the actual noise distribution. Additionally, it is seen that in impulsive environments, diversity represents a suitable strategy to improve GD performance.

4. MIMO radar systems applied to wireless communications based on GASP

Multiple-input multiple-output (MIMO) wireless communication systems have received a great attention owing to the following viewpoints: a) MIMO wireless communication systems have been deemed as efficient spatial multiplexers and b) MIMO wireless communication systems have been deemed as a suitable strategy to ensure high-rate communications on wireless channels (Foschini, 1996). Space-time coding has been largely investigated as a viable means to achieve spatial diversity, and thus to contrast the effect of fading (Tarokh, et al., 1998 and Hochwald, et al., 2000). We apply GASP to the design and implementation of MIMO wireless communication systems used space-time coding technique. Theoretical principles of MIMO wireless communication systems were discussed and the potential advantages of MIMO wireless communication systems are thoroughly considered in (Fishler, et al., 2006).

MIMO architecture is able to provide independent diversity paths, thus yielding remarkable performance improvements over conventional wireless communication systems in the medium-high range of detection probability. As was shown in (Fishler, et al., 2006), the MIMO mode can be conceived as a means of bootstrapping to obtain greater coherent gain. Some practical issues concerning implementation (equipment specifications, dynamic range, phase noise, system stability, isolation and spurs) of MIMO wireless communication systems are discussed in (Skolnik, 2008).

MIMO wireless communication systems can be represented by m transmit antennas, spaced several wavelengths apart, and n receive antennas, not necessarily collocated, and possibly forwarding, through a wired link, the received echoes to a fusion center, whose task is to make the final decision about the signal in the input waveform. If the spacing between the transmit antennas is large enough and so is the spacing between the receive antennas, a rich scattering environment is generated, and each receive antenna processes l statistically independent copies of incoming signal. The concept of rich scattering environment is borrowed from communication theory, and models a situation where the MIMO architecture yields interchannel interference, eventually resulting into a number of independent random channels. Unlike a conventional wireless communication array system, which attempts to maximize the coherent processing, MIMO wireless communication system resorts to the fading diversity in order to improve the detection performance. Indeed, it is well known that, in conventional wireless communication array system, multiple access interference (MAI) of the order of 10 dB may arise. This effect leads to severe degradations of the detection performance, due to the high signal correlation at the array elements. This drawback might be partially circumvented under the use of MIMO wireless communication system, which exploits the channel diversity and fading. Otherwise, uncorrelated signals at the array elements are available. Based on mentioned above statements, it was shown in (Fishler, et al., 2006) that in the case of additive white Gaussian noise (AWGN), transmitting orthogonal waveforms result into increasingly constrained fluctuation of interference.

Our approach is based on implementation of GASP and employment of some key results from communication theory, and in particular, the well-known concept that, upon suitably space-time encoding the transmitted waveforms, a maximum diversity order given by $m \times n$ can be achieved. Importing these results in a wireless communication system scenario poses

a number of problems, which forms the object of the present study, and in particular: a) the issue of waveform design, which exploits the available knowledge as to space-time codes; b) the issue of designing a suitable detection structure based on GASP, also in the light of the fact that the disturbance can no longer be considered as AWGN, due to the presence of interferences; and c) at the performance assessment level, the issue of evaluating the maximum diversity order that can be achieved and the space-time coding ensuring it under different types of interferences. The first and third tasks are merged in the unified problem of determining the space-time coding achieving maximum diversity order in signal detection, for constrained BER, and for given interference covariance. As to the second task, the decision-making criterion exploiting by GASP is employed.

Unlike (Fishler, et al., 2006), no assumption is made on either the signal model or the disturbance covariance. Thus, a family of detection structures is derived, depending upon the number of transmitting and receiving antennas and the disturbance covariance. A side result, which paves the way to further investigations on the feasibility of fully adaptive MIMO wireless communication systems is that the decision statistic, under the null hypothesis of no signal, is an ancillary statistic, in the sense that it depends on the actual interference covariance matrix, but its probability density function (pdf) is functionally independent of such a matrix. Therefore, threshold setting is feasible with no prior knowledge as to the interference power spectrum. As to the detection performance, a general integral form of the probability of detection P_D is provided, holding independent of the signal fluctuation model. The formula is not analytically manageable, nor does it appear to admit general approximate expressions, that allow us to give an insightful look in the wireless communication system behavior. We thus restrict our atention to the case of Rayleigh-distributed attenuation, and use discussed in (De Maio & Lops, 2007) an information-theoretic approach to code construction, which, surprisingly enough, leads to the same solution found through the optimization of the Chernoff bound.

4.1 System model

We consider MIMO radar system composed of m fixed transmitters and n fixed receivers and assume that the antennas as the two ends of the wireless communication system are sufficiently spaced such that a possible incoming message and/or interference provides uncorrelated reflection coefficients between each transmit/receive pair of sensors. Denote by $s_i(t)$ the baseband equivalent of the coherent pulse train transmitted by the i-th antenna, for example,

$$s_i(t) = \sum_{j=1}^{N} a_{i,j} p[t-(j-1)T_p], \qquad i = 1,\ldots,m \tag{40}$$

where $p(t)$ is the signature of each transmitted pulse, which we assume, without loss of generality, with unit energy and duration τ_p; T_p is the pulse repetition time;

$$\mathbf{a}_i = [a_{i,1},\ldots,a_{i,N}]^T \tag{41}$$

is an N-dimensional column vector whose entries are complex numbers which modulate both in amplitude and in phase the N pulses of the train, where $(\cdot)^T$ denotes transpose. In the sequel, we refer to $\mathbf{a}_i$ as the code word of the i-th antenna. The baseband equivalent of the signal received by the i-th sensor, from a target with two-way time delay τ, can be presented in the following form

$$x_i(t) = \sum_{l=1}^{m} a_{i,l} \sum_{j=1}^{N} a_{l,j} p[t - \tau - (j-1)T_p] + n_i(t) \ , \qquad i = 1,\ldots,n \ , \tag{42}$$

where $a_{i,l}$, $i = 1,\ldots,n$ and $l = 1,\ldots,m$, are complex numbers accounting for both the target backscattering and the channel propagation effects between the l-th transmitter and the i-th receiver; $n_i(t)$, $i = 1,\ldots,n$, are zero-mean, spatially uncorrelated, complex Gaussian random processes accounting for both the external and the internal disturbance. For simplicity, we assume a zero-Doppler target, but all the derivations can be easily extended to account for a possible known Doppler shift. We explicitly point out that the validity of the above model requires the narrowband assumption

$$\frac{d_{\max}^m + d_{\max}^n}{c} << \frac{1}{B} \tag{43}$$

where B is the bandwidth of the transmitted pulse, $d_{\max}^m$ and $d_{\max}^n$ denote the maximum spacing between two sensors at the transmitter and the receiver end, respectively. The signal $x_i(t)$, at each of the receive elements, is matched filtered to the pulse $p(t)$ by preliminary filter of the GD and the filter output is sampled at the time instants $\tau + (k-1)T_p$, $k = 1,\ldots,N$. Thus, denote by $x_i(k)$ the k-th sample, i.e.,

$$x_i(k) = \sum_{l=1}^{m} a_{i,l} a_{l,k} + n_i(k) \ , \tag{44}$$

where $n_i(k)$ is the filtered noise sample. Define the N-dimensional column vectors

$$\mathbf{x}_i = \left[x_i(1),\ldots,x_i(N)\right]^T \tag{45}$$

and rewrite them as

$$\mathbf{x}_i = \mathbf{A}\boldsymbol{\alpha}_i + \boldsymbol{\xi}_{PF_i} \ , \qquad i = 1,\ldots,n \tag{46}$$

where

$$\boldsymbol{\xi}_{PF_i} = [\xi_{PF_i}(1),\ldots,\xi_{PF_i}(N)]^T \ , \tag{47}$$

$$\boldsymbol{\alpha}_i = [a_{i,1},\ldots,a_{i,m}]^T \ , \tag{48}$$

and the $(N \times m)$-dimensional matrix $\mathbf{A}$, defined in the following form

$$\mathbf{A} = \left[\mathbf{a}_1, \ldots, \mathbf{a}_m\right] \tag{49}$$

has the code words as columns. This last matrix is referred to as the code matrix. We assume that **A** is full rank matrix. It is worth underlining that the model given by (46) applies also to the case that space-time coding is performed according to (De Maio & Lops, 2007), namely, by dividing a single pulse in N sub-pulses. The code matrix **A** thus defines m different code words of length N, which can be received by a single receive antenna, thus defining the multiple-input single-output (MISO) structure, as well as by a set of n receive antennas, as in the present study.

4.2 GD design for MIMO radar systems applied to wireless communications

The problem of detecting a target return signal with a MIMO radar system can be formulated in terms of the following binary hypothesis test

$$\begin{cases} H_0 \Rightarrow \quad \mathbf{x}_i = \xi_{PF_i}, & i = 1, \ldots, n \\ H_1 \quad \Rightarrow \quad \mathbf{x}_i = \mathbf{A}\boldsymbol{\alpha}_i + \xi_{PF_i}, & i = 1, \ldots, n \end{cases} \tag{50}$$

where ξ_{PF_i}, $i = 1, \ldots, n$, are statistically independent and identically distributed (i.i.d.) zero-mean complex Gaussian vectors with covariance matrix

$$E\left[\xi_{PF_i}\xi_{PF_i}^*\right] = E\left[\xi_{AF_i}\xi_{AF_i}^*\right] = \mathbf{M}\,. \tag{51}$$

Here $E[\cdot]$ denotes the statistical expectation and $(*)$ denotes conjugate transpose. The covariance matrix (51) is assumed positive definite and known. According to the Neyman-Pearson criterion, the optimum solution to the hypotheses testing problem (50) must be the likelihood ratio test. However, for the case at hand, it cannot be implemented since total ignorance of the parameters $\boldsymbol{\alpha}_i$ is assumed. One possible way to circumvent this drawback is to resort to the generalized likelihood ratio test (GLRT) (Van Trees, 2003), which is tantamount to replacing the unknown parameters with their maximum likelihood (ML) estimates under each hypothesis. Applying GASP to the GLRT, we obtain the following decision rule

$$\frac{\max\limits_{\boldsymbol{\alpha}_1,\ldots,\boldsymbol{\alpha}_n} f\left(\mathbf{x}_1,\ldots,\mathbf{x}_n \mid H_1, \mathbf{M}, \boldsymbol{\alpha}_1,\ldots,\boldsymbol{\alpha}_n\right)}{f\left(\xi_{AF_1},\ldots,\xi_{AF_n} \mid H_0, \mathbf{M}\right)} \underset{H_0}{\overset{H_1}{\gtrless}} K_g\,, \tag{52}$$

where $f(\mathbf{x}_1,\ldots,\mathbf{x}_n \mid H_1, \mathbf{M}, \boldsymbol{\alpha}_1,\ldots,\boldsymbol{\alpha}_n)$ is the probability density function (pdf) of the data under the hypothesis H_1 and $f(\xi_{AF_1},\ldots,\xi_{AF_n} \mid H_0, \mathbf{M})$ is pdf of the data under the hypothesis H_0, respectively, K_g is a suitable modification of the original threshold. Previous assumptions imply that the aforementioned pdfs can be written in the following form:

$$f\left(\xi_{AF_1},\ldots,\xi_{AF_n} \mid H_0, \mathbf{M}\right) = \frac{1}{\pi^{Nn}\det^n(\mathbf{M})}\exp\left[-\sum_{i=1}^{n}\xi_{AF_i}^*\mathbf{M}^{-1}\xi_{AF_i}\right] \tag{53}$$

at the hypothesis H_0 and

$$f(\mathbf{x}_1,\ldots,\mathbf{x}_n \mid H_1,\mathbf{M},\boldsymbol{\alpha}_1,\ldots,\boldsymbol{\alpha}_n) = \frac{1}{\pi^{Nn}\det^n(\mathbf{M})}\exp\left[-\sum_{i=1}^{n}(\mathbf{x}_i-\mathbf{A}\boldsymbol{\alpha}_i)^*\mathbf{M}^{-1}(\mathbf{x}_i-\mathbf{A}\boldsymbol{\alpha}_i)\right] \tag{54}$$

under the hypothesis H_1, where $\det(\cdot)$ denotes the determinant of a square matrix. Substituting (16) and (17) in (15), we can recast the GLRT based on GASP, after some mathematical transformations, in the following form

$$\sum_{i=1}^{n}\boldsymbol{\xi}_{AF_i}^*\mathbf{M}^{-1}\boldsymbol{\xi}_{AF_i} - \sum_{i=1}^{n}\min_{\boldsymbol{\alpha}_i}(\mathbf{x}_i-\mathbf{A}\boldsymbol{\alpha}_i)^*\mathbf{M}^{-1}(\mathbf{x}_i-\mathbf{A}\boldsymbol{\alpha}_i) \underset{H_0}{\overset{H_1}{\gtrless}} K_g\,. \tag{55}$$

In order to solve the n minimization problems in (55) we have to distinguish between two different cases.

Case 1: $N > m$. In this case, the quadratic forms in (55) achieve the minimum at

$$\hat{\boldsymbol{\alpha}}_i = (\mathbf{A}^*\mathbf{M}^{-1}\mathbf{A})^{-1}\mathbf{A}^*\mathbf{M}^{-1}\mathbf{x}_i\,, \quad i=1,\ldots,n \tag{56}$$

and, as a consequence, the GLRT based on GASP at the main condition of GD functioning, i.e., equality in whole range of parameters between the transmitted information signal and refe-rence signal (signal model) in the receiver part, becomes

$$2\sum_{i=1}^{n}\mathbf{x}_i^*\mathbf{M}^{-1}\mathbf{A}(\mathbf{A}^*\mathbf{M}^{-1}\mathbf{A})^{-1}\mathbf{A}^*\mathbf{M}^{-1}\mathbf{x}_i - \sum_{i=1}^{n}\mathbf{x}_i^*\mathbf{M}^{-1}\mathbf{A}\mathbf{A}^*\mathbf{M}^{-1}\mathbf{x}_i + \sum_{i=1}^{n}\boldsymbol{\xi}_{AF_i}^*\mathbf{M}^{-1}\mathbf{M}^{-1}\boldsymbol{\xi}_{AF_i} \underset{H_0}{\overset{H_1}{\gtrless}} K_g\,. \tag{57}$$

Case 2: $N \le m$. In this case, the minimum of the quadratic forms in (55) is zero, since each linear system

$$\mathbf{A}\hat{\boldsymbol{\alpha}}_i = \mathbf{x}_i\,, \quad i=1,\ldots,n \tag{58}$$

is determined. As a consequence the GLRT based on GASP at the main condition of GD functioning, i.e., equality in whole range of parameters between the transmitted information signal and reference signal (signal model) in the receiver part, becomes

$$\sum_{i=1}^{n}\boldsymbol{\xi}_{AF_i}^*\mathbf{M}^{-1}\mathbf{M}^{-1}\boldsymbol{\xi}_{AF_i} - \sum_{i=1}^{n}\mathbf{x}_i^*\mathbf{M}^{-1}\mathbf{A}\mathbf{A}^*\mathbf{M}^{-1}\mathbf{x}_i \underset{H_0}{\overset{H_1}{\gtrless}} K_g\,. \tag{59}$$

4.3 Performance analysis

In order to define possible design criteria for the space-time coding, it is useful to establish a direct relationship between the probability of detection P_D and the transmitted waveform, which is thus the main goal of the present section. Under the hypothesis H_0, the left hand side of the GLRT based on GASP can be written in the following form

$$\sum_{i=1}^{n}\boldsymbol{\xi}_{AF_i}^*\mathbf{M}^{-1}\boldsymbol{\xi}_{AF_i} - \sum_{i=1}^{n}\boldsymbol{\xi}_{PF_i}^*\mathbf{M}^{-1}\boldsymbol{\xi}_{PF_i} \tag{60}$$

and, represents the GD background noise. It follows from (Tuzlukov 2005) that the decision statistic is defined by the modified second-order Bessel function of an imaginary argument or, as it is also called, McDonald's function with $m \times n$ degrees of freedom. Thus, the decision statistic is independent of dimensionality N of the column vector given by (41) whose entries are complex numbers, which modulate both in amplitude and in phase the N pulses of the train. Consequently, the probability of false alarm P_{FA} can be evaluated in the following form

$$P_{FA} = \exp(-K_g)\sum_{k=0}^{n}\frac{(K_g)^k}{k!}. \tag{61}$$

This last expression allows us to note the following observations: a) the decision statistic is ancillary, in the sense that it depends on the actual interference covariance matrix, but its pdf is functionally independent of such a matrix; and b) the threshold setting is feasible with no prior knowledge as to the interference power spectrum, namely, the GLRT based on GASP ensures the constant false alarm (CFAR) property.

Under the hypothesis H_1, given $\boldsymbol{\alpha}_i$,the vectors $\mathbf{x}_i$,$i = 1,\ldots,n$, are statistically independent complex Gaussian vectors with the mean value $\mathbf{M}^{-1}\mathbf{A}\boldsymbol{\alpha}_i$ and identity covariance matrix. It follows that, given $\boldsymbol{\alpha}_i$, the GLRT based on GASP is no the central distributed modified second-order Bessel function of an imaginary argument, with the no centrality parameter $\sum_{i=1}^{n}\boldsymbol{\alpha}_i^*\mathbf{A}^*\mathbf{M}^{-1}\mathbf{A}\boldsymbol{\alpha}_i$ and degrees of freedom $m \times n$. Consequently, the conditional probability of detection P_D based on statements in (Van Trees, 2003) and discussion in (Tuzlukov, 2005) can be represented in the following form

$$P_D = Q_{m\times n}\left(\sqrt{2q},\sqrt{2K_g}\right), \tag{62}$$

where

$$q = \sum_{i=1}^{n}\boldsymbol{\alpha}_i^*\mathbf{A}^*\mathbf{M}^{-1}\mathbf{A}\boldsymbol{\alpha}_i \tag{63}$$

and $Q_k(\cdot,\cdot)$ denotes the generalized Marcum Q function of order k. An alternative expression for the conditional probability of detection P_D , in terms of an infinite series, can be also written in the following form:

$$P_D = \sum_{k=0}^{\infty}\frac{\exp(-q)q^k}{k!}\left[1-\Gamma_{inc}(K_g,k+m\times n)\right], \tag{64}$$

where

$$\Gamma_{inc}(p,r) = \frac{1}{\Gamma(r)}\int_0^w \exp(-z)z^{r-1}dz \tag{65}$$

is the incomplete Gamma function. Finally, the unconditional probability of detection P_D can be obtained averaging the last expression over the pdf of $\boldsymbol{\alpha}_i$, $i = 1,\ldots,n$.

4.4 Code design by information-theoretic approach

In principle, the basic criterion for code design should be the maximization of the probability of detection P_D given by (62) over the set of admissible code matrices, i.e.,

$$\arg\ \max_{\mathbf{A}} E\left[Q_{m\times n}\left(\sqrt{2q},\sqrt{2K_g}\right)\right] = \arg\ \max_{\mathbf{A}} E\left[Q_{m\times n}\left(\sqrt{2\sum_{i=1}^{n}\boldsymbol{\alpha}_i^*\mathbf{A}^*\mathbf{M}^{-1}\mathbf{A}\boldsymbol{\alpha}_i},\sqrt{2K_g}\right)\right], \quad (66)$$

where $\arg\ \max_{\mathbf{A}}(\cdot)$ denotes the value of $\mathbf{A}$, which maximizes the argument and the statistical average is over $\boldsymbol{\alpha}_i$, $i = 1,\ldots,n$. Unfortunately, the above maximization problem does not appear to admit a closed-form solution, valid independent of the fading law, whereby we prefer here to resort to the information-theoretic criterion supposed in (De Maio & Lops, 2007). Another way is based on the optimization of the Chernoff bound over the code matrix $\mathbf{A}$. As was shown in (De Maio & Lops, 2007), these ways lead to the same solution, which subsumes some well-known space-time coding, such as Alamouti code and, more generally, the class of space-time coding from orthogonal design (Alamouti, 1998) and (Tarokh et al., 1999), which have been shown to be optimum in the framework of communication theory. In subsequent derivations, we assume that $\boldsymbol{\alpha}_i$, $i = 1,\ldots,n$, are independent and identically distributed (i.i.d.) zero-mean complex Gaussian vectors with scalar covariance matrix, i.e.,

$$E\left[\boldsymbol{\alpha}_i\boldsymbol{\alpha}_i^*\right] = \sigma_a^2\mathbf{I}, \quad (67)$$

where σ_a^2 is a real factor accounting for the backscattered useful power, and $\mathbf{I}$ denotes the identity matrix.

Roughly speaking, the GLRT strategy overcomes the prior uncertainty as to the target fluctuations by ML estimating the complex target amplitude, and plugging the estimated value into the conditional likelihood in place of the true value. Also, it is well known that, under general consistency conditions, the GLRT converges towards the said conditional likelihood, thus achieving a performance closer and closer to the perfect measurement bound, i.e., the performance of an optimum test operating in the presence of known target parameters. Diversity, on the other hand, can be interpreted as a means to transform an amplitude fluctuation in an increasingly constrained one. It is well known, for example that, upon suitable receiver design, exponentially distributed square target amplitude may be transformed into a central chi-square fluctuation with d degrees of freedom through a diversity of order d in any domain. More generally, a central chi-square random variable with $2m$ degrees of freedom may be transformed into a central chi-square with $2m \times d$ degrees of freedom. In this framework, a reasonable design criterion for the space-time coding is the maximization of the mutual information between the signals received from the various diversity branches and the fading amplitudes experienced thereupon. Thus, denoting by $I(\boldsymbol{\alpha},\mathbf{X})$ the mutual information (Cover & Thomas, 1991) between the random matrices

$$\boldsymbol{\alpha} = [\boldsymbol{\alpha}_1, \ldots, \boldsymbol{\alpha}_n] \tag{68}$$

and

$$\mathbf{X} = [\mathbf{x}_1, \ldots, \mathbf{x}_k] = \mathbf{A}\boldsymbol{\alpha} + \boldsymbol{\Xi} \tag{69}$$

the quantity to be maximized is

$$I(\boldsymbol{\alpha}, \mathbf{X}) = H(\mathbf{X}) - H(\mathbf{X} \mid \boldsymbol{\alpha}), \tag{70}$$

where

$$\boldsymbol{\Xi} = [\boldsymbol{\xi}_1, \ldots, \boldsymbol{\xi}_n], \tag{71}$$

$H(\mathbf{X})$ denotes the entropy of the random matrix $\boldsymbol{\Xi}$, and $H(\mathbf{X} \mid \boldsymbol{\alpha})$ is the conditional entropy of $\mathbf{X}$ given $\boldsymbol{\alpha}$ (Cover & Thomas, 1991). Exploiting the statistical independence between $\boldsymbol{\alpha}$ and $\mathbf{X}$, we can write (70) in the following form

$$I(\boldsymbol{\alpha}, \mathbf{X}) = H(\mathbf{X}) - H(\mathbf{X} \mid \boldsymbol{\alpha}) = H(\mathbf{X}) - H(\boldsymbol{\Xi}), \tag{72}$$

where $H(\boldsymbol{\Xi})$ is the entropy of the random matrix $\boldsymbol{\Xi}$. Assuming that the columns of $\boldsymbol{\alpha}$ are i.i.d. zero-mean complex Gaussian vectors with covariance matrix $\sigma_a^2 \mathbf{I}$, we can write $H(\mathbf{X})$ and $H(\boldsymbol{\Xi})$, respectively, in the following form:

$$H(\mathbf{X}) = x \lg\left[(\pi e)^N \det(\mathbf{M} + \sigma_a^2 \mathbf{A}\mathbf{A}^*)\right] \tag{73}$$

and

$$H(\boldsymbol{\Xi}) = x \lg\left[(\pi e)^N \det(\mathbf{M})\right]. \tag{74}$$

As design criterion we adopt the maximization of the minimum probability of detection P_D, which can be determined as the lower Chernoff bound, under an equality constraint for the average signal-to-clutter power ratio (SCR) given by

$$SCR = \frac{1}{Nmn} E\left[\sum_{i=1}^{n} \boldsymbol{\alpha}_i^* \mathbf{A}^* \mathbf{M}^{-1} \mathbf{A} \boldsymbol{\alpha}_i\right] = \frac{\sigma_a^2}{Nm} \operatorname{tr}\left(\mathbf{A}^* \mathbf{M}^{-1} \mathbf{A}\right) = \frac{\sigma_a^2}{Nm} \sum_{j=1}^{m} \lambda_j, \tag{75}$$

where $\operatorname{tr}(\cdot)$ denotes the trace of a square matrix and λ_j are the elements or corresponding ordered (in decreasing order) eigenvalues of the diagonal matrix $\boldsymbol{\Lambda}$ defined by the eigenvalue decomposition $\mathbf{V}^* \boldsymbol{\Lambda} \mathbf{V}$ of the matrix $\mathbf{M}^{-1} \mathbf{A}\mathbf{A}^* \mathbf{M}^{-1}$, where $\mathbf{V}$ is an $N \times N$ unitary matrix. The considered design criterion relies on the maximization of the mutual information (70) under equality constraint (75) for SCR. This is tantamount to solving the following constrained minimization problem since $H(\boldsymbol{\Xi})$ does not exhibit any functional dependence on $\mathbf{A}$.

$$\min_{\lambda_1, \ldots, \lambda_m} \prod_{j=1}^{m} \left[\frac{1}{1 + \gamma(\lambda_j \sigma_a^2 + 1)}\right]^n \quad \text{and} \quad \frac{\sigma_a^2}{Nm} \sum_{j=1}^{m} \lambda_j = \mu \tag{76}$$

which, taking the logarithm, is equivalent

$$\max_{\lambda_1,\ldots,\lambda_m} \sum_{j=1}^{m} \lg\left[1+\gamma(\sigma_a^2\lambda_j+1)\right] \quad \text{and} \quad \sum_{j=1}^{m}\lambda_j = \frac{\mu m N}{\sigma_a^2}, \tag{77}$$

where γ is the variable defining the upper Chernoff bound (Benedetto & Biglieri, 1999).

Since $\lg[1+\gamma(\sigma_a^2 y+1)]$ is a concave function of y, we can apply Jensen's inequality (Cover & Thomas, 1991) to obtain

$$\sum_{j=1}^{m} \lg\left[1+\gamma(\sigma_a^2\lambda_j+1)\right] \le m\lg\left[1+\gamma\left(\frac{1}{m}\sum_{j=1}^{m}\lambda_j\sigma_a^2+1\right)\right]. \tag{78}$$

Moreover, forcing in the right hand side of (78), the constraint of (77), we obtain

$$\sum_{j=1}^{m} \lg\left[1+\gamma(\sigma_a^2\lambda_j+1)\right] \le m\lg\left[1+\gamma(\mu N+1)\right]. \tag{79}$$

The equality in (79) is achieved if

$$\lambda_k = \frac{\mu N}{\sigma_a^2}, \quad k=1,\ldots,m \tag{80}$$

implying that an optimum code must comply with the condition

$$\mathbf{M}^{-1}\mathbf{A}\mathbf{A}^*\mathbf{M}^{-1} = \begin{cases} \dfrac{\mu N}{\sigma_a^2}\left[2\mathbf{A}(\mathbf{A}^*\mathbf{M}^{-1}\mathbf{A})^{-1}\mathbf{A}^* - \mathbf{A}\mathbf{A}^*\right] & \text{Case 1} \\ \dfrac{\mu N}{\sigma_a^2}\mathbf{I} & \text{Case 2}. \end{cases} \tag{81}$$

In particular, if the additive disturbance is white, i.e., $\mathbf{M} = \sigma_n^2\mathbf{I}$, the above equation reduces to

$$\mathbf{A}\mathbf{A}^* = \begin{cases} \dfrac{4\sigma_n^4\mu N}{\sigma_a^2}(\mathbf{A}^*\mathbf{M}^{-1}\mathbf{A})^{-1} & \text{Case 1} \\ \dfrac{4\sigma_n^4\mu N}{\sigma_a^2}\mathbf{I} & \text{Case 2}. \end{cases} \tag{82}$$

The last equation subsumes, as a relevant case, the set of orthogonal space-time codes. Indeed, assuming $N = n = m$, the condition (82) yields, for the optimum code matrix,

$$\mathbf{A}\mathbf{A}^* = \frac{4\sigma_n^4\mu N}{\sigma_a^2}\mathbf{I}, \tag{83}$$

i.e., the code matrix $\mathbf{A}$ should be proportional to any unitary $N \times N$ matrix. Thus, any orthonormal basis of F^N can be exploited to construct an optimum code under the Case 2 and

white Gaussian noise. If, instead, we restrict our attention to code matrices built upon Galois Fields (GF), there might be limitations to the existing number of optimal codes. Deffering to (Tarokh, 1999) and to the Urwitz-Radon condition exploited therein, we just remind here that, under the constraint of binary codes, unitary matrices exist only for limited values of N: for 2×2 coding, we find the normalized Alamouti code (Alamouti, 1998), which is an orthonormal basis, with elements in GF (2), for F^2 .

Make some comments. First notice, that under the white Gaussian noise, both performance measures considered above are invariant under unitary transformations of the code matrix, while at the correlated clutter they are invariant with respect to right multiplication of **A** by a unitary matrix. Probably, these degrees of freedom might be exploited for further optimization in different radar functions. Moreover, (70) represents the optimum solution for the case that no constraint is forced upon the code alphabet; indeed, the code matrices turn out in general to be built upon the completely complex field. If, instead, the code alphabet is constrained to be finite, then the optimum solution (70) may be no longer achievable for arbitrary clutter covariance. In fact, while for the special case of white clutter and binary alphabet the results of (Tarokh, 1999) may be directly applied for given values of m and n, for arbitrary clutter covariance and (or) transmit/receive antennas number, a code matrix constructed on GF (q) and fulfilling the conditions (70) is no longer ensured to exist. In these situations, which however form the object of current investigations, a brute-force approach could consist of selecting the optimum code through an exhaustive search aimed at solving (66), which would obviously entail a computational burden $O\left(q^{mN}\right)$ floating point operations. Herein we use the usual Landau notation. $O(n)$.; hence, an algorithm is $O(n)$ if its implementation requires a number of floating point operations proportional to n (Golub & Van Loan, 1996). Fortunately, the exhaustive search has to be performed off line. The drawback is that the code matrix would inevitably depend on the target fluctuation law; moreover, if one would account for possible nonstationarities of the received clutter, a computationally acceptable code updating procedure should be envisaged so, as to optimally track the channel and clutter variations.

4.5 Simulation

The present section is aimed at illustrating the validity of the proposed encoding and detection schemes under diverse scenarios. In particular, we first assume uncorrelated disturbance, whereby orthogonal space-time codes are optimal. In this scenario, simulations have been run, and the results have been compared to the Chernoff bounds of the conventional GLRT receiver discussed in (De Maio & Lops, 2007) and to the GD performance achievable through a single-input single-output (SISO) radar system. Next, the effect of the disturbance correlation is considered, and the impact of an optimal code choice is studied under different values of transmit/receiver antenna numbers. In all cases, the behavior of the mutual information between the observations and the target replicas can be also represented, showing that such a measure is itself a useful tool for system design and assessment, but this analysis is outside of a scope of the present chapter.

Figure 8 represents the white Gaussian disturbance and assesses the performance of the GLRT GD. To elicit the advantage of waveform optimization, we consider both the optimum

coded wireless communication system and the uncoded one, corresponding to pulses with equal amplitudes and phases. The probability of detection P_D is plotted versus SCR assuming $P_{FA} = 10^{-4}$ and $N = m = n = 2$. This simulation setup implies that the Alamouti code is optimum in the sense specified by (82). For comparison purposes, we also plot the performance of the uncoded SISO GD. We presented the performance of the conventional GLRT to underline a superiority of GD employment.

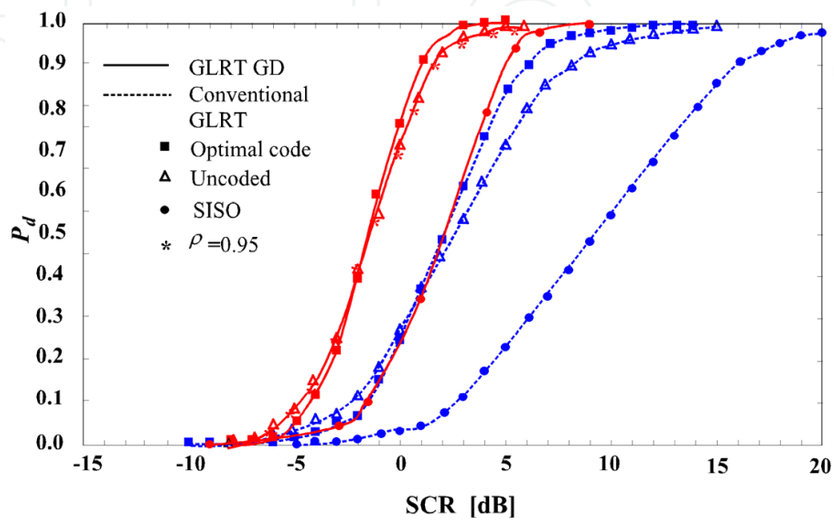

Fig. 8. P_D versus SCR; white Gaussian disturbance and disturbance with exponentially shaped covariance matrix ($\rho = 0.95$); $P_{FA} = 10^{-4}; N = m = n = 2$.

The curves highlight that the optimum coded wireless communication system employing the GD and exploiting the Alamouti code, achieves a significant performance gain with respect to both the uncoded and the SISO radar systems. Precisely, for $P_D = 0.9$, the performance gain that can be read as the horizontal displacement of the curves corresponding to the analyzed wireless communication systems, is about 1 dB with reference to the uncoded GLRT GD wireless communication system and 5 dB with respect to the SISO GD. Superiority of employment GD with respect to the conventional GLRT wireless communication systems achieves 6 dB for the optimum coded wireless communication system, 8 dB for the uncoded wireless communication systems, and 12 dB for SISO wireless communication systems. It is worth pointing out that the uncoded wireless communication system performs slightly better the coded one for low detection probabilities. This is a general trend in detection theory, which predicts that less and less constrained fluctuations are detrimental in the high SCR region, while being beneficial in the low SCR region. On the other hand, the code optimization results in a more constrained fluctuation, which, for low SCRs, leads to slight performance degradation as compared with uncoded systems. The effect of disturbance correlation is elicited in Fig.8 too, where the analysis is produced assuming an overall disturbance with exponentially shaped covariance matrix, whose one-lag correlation coefficient ρ is set to 0.95. In this case, the Alamouti code is no longer optimum. The plots show that the performance gain of the optimum coded GLRT GD wireless communication system over both the uncoded and the SISO GD detector is almost equal to that resulting when the disturbance is

white. On the other hand, setting $N = m = n = 2$ in (81), shows that, under correlated disturbance, the optimum code matrix is proportional to **M**: namely, an optimal code tends to restore the "white disturbance condition." This also explains why the conventional Alamouti code follows rather closely the performance of the uncoded GLRT GD wireless communication system.

The effect of number n of receive antennas on the performance is analyzed in Fig.9, where P_D is plotted versus SCR for $N = m = 8$, exponentially shaped clutter covariance matrix with $\rho = 0.95$, and several values of n. The curves highlight that the higher n, namely the higher the diversity order, the better the performance. Specifically, the performance gap between the case $n = 8$ and the case of a MISO GLRT GD radar system (i.e., $n = 1$) is about 2.5 dB, while, in the case of the conventional GLRT radar systems, is about 7 dB for $P_D = 0.9$. A great superiority between the radar systems employing GLRT GD and conventional GLRT is evident and estimated at the level of 6 dB at $n = 8$ and 10 dB in the case of a MISO (i.e., $n = 1$) for $P_D = 0.9$. Notice that this performance trend is also in accordance with the expression of the mutual information that exhibits a linear, monotonically increasing, dependence on n. The same qualitative, but not quantitative, performance can be presented under study of the number m of available transmit antennas on the GLRT GD wireless communication system performance.

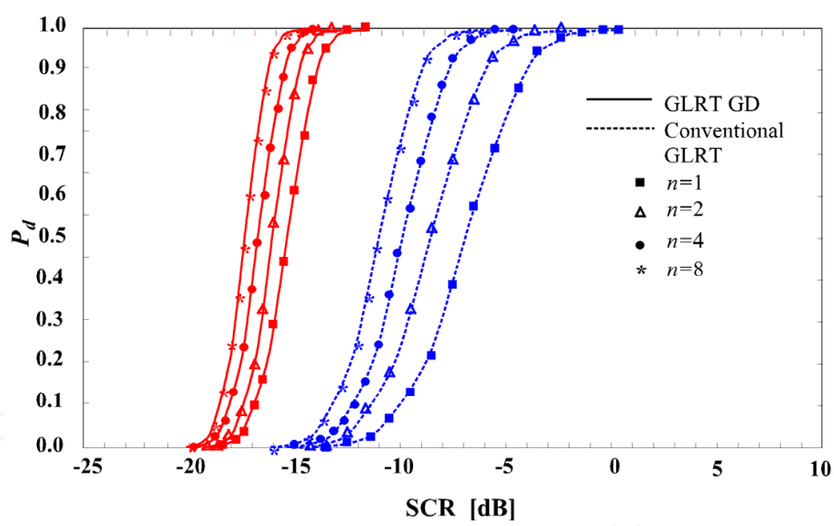

Fig. 9. P_D of optimum coded system versus SCR; disturbance with exponentially shaped covariance matrix ($\rho = 0.95$); and several values of m; $P_{FA} = 10^{-4}$; $N = m = 8$.

4.6 Discussion

We have addressed the synthesis and the analysis of MIMO radar systems employing the GD and exploiting space-time coding. To this end, after a short description of the MIMO radar signal model applied to wireless communications, we have devised the GLRT GD under the assumption of the additive white Gaussian disturbance. Remarkably, the decision statistic is ancillary and, consequently, CFAR property is ensured, namely, the detection thresh-

old can be set independent of the disturbance spectral properties. We have also assessed the performance of the GLRT GD providing closed-form expressions for both P_D and P_{FA}. Lacking a manageable expression for P_D under arbitrary target fluctuation models, we restricted our attention to the case of Rayleigh distributed amplitude fluctuation. The performance assessment that has been undertaken under several instances of number of receive and transmit antennas, and of clutter covariance, has confirmed that MIMO GD radar systems with a suitable space-time coding achieve significant performance gains over SIMO, MISO, SISO, or conventional SISO radar systems employing the conventional GLRT detector. Also, these MIMO GD radar systems outperform the listed above systems employing the conventional GD. Future research might concern the extension of the proposed framework to the case of an unknown clutter covariance matrix, in order to come up with a fully adaptive detection system. Moreover, another degree of freedom, represented by the shapes of the transmitted pulses could be exploited to further optimize the performance. More generally, the impact of space-time coding in MIMO CD radar systems to estimate the target parameters is undoubtedly a topic of primary concern. Finally, the design of GD and space-time coding strategies might be of interest under the very common situation of non-Gaussian radar clutter.

5. Acknowledgment

This research was supported by Kyungpook National University research Grant, 2011.

6. References

Barnard, T. & Weiner, D. (1996). Non-Gaussian Clutter Modelling with Generalized Spherically Invariant Random Vectors. *IEEE Transactions on Signal Processing*, Vol. SP-44, No. 10, pp. 2384-2390, ISNN 1053-587X.

Bello, P. (1963), Characterization of Randomly Time-Invariant Linear Channels. *IEEE Transactions on Communications Systems*, Vol. CS-11, No. 12, pp. 360-393, ISSN 0096-1965.

Benedetto, S. & Biglieri, E. (1999). *Principle of Digital Transmission with Wireless Applications*, Plenum Press, ISBN 0-3064-5753-9, New York, USA.

Blankenship, T. & Rappaport, T. (1998). Characteristics of Impulsive Noise in the 450-MHz band in hospitals and clinics. *IEEE Transactions on Antennas and Propagation*, Vol. 46, No. 2, pp.194-203, ISNN 0018-926X.

Buzzi, S. et all. (1999). Optimum Detection over Rayleigh-Fading, Dispersive Channels with Non-Gaussian Noise. *IEEE Transactions on Communications*, Vol. COM-35, No. 7, pp. 926-934, ISSN 0096-1965.

Buzzi, S. et all. (1997). Signal Detection over Rayleigh-Fading Channels with Non-Gaussian Noise. In *Proc. Inst. Elect. Eng., Commun.*, Vol. 144, No. 6, pp. 381-386.

Buzzi, S. et all. (2001). Optimum Diversity Detection over Fading Disperive Channels with Non-Gaussian Noise. *IEEE Transactions on Communications*, Vol. COM-49, No. 4, pp. 767-775, ISSN 0096-1965.

Gini, F. et al. (1998). The Modified Cramer-Rao Bound in Vector Parameter Estimation. *IEEE Transactions on Communications*, Vol. COM-46, No. 1, pp. 52-60, ISSN 0096-1965.

Conte, E. et al. (1995). Canonical Detection in Spherically Invariant Noise. *IEEE Transactions on Communications*, Vol. COM-43, No. 2-4, pp. 347-353, ISSN 0096-1965.

Conte, E. et al. (1995). Optimum Detection of Fading Signals in Impulsive Noise. *IEEE Transactions on Communications*, Vol. COM-43, No. 2-4, pp. 869-876, ISSN 0096-1965.

Cover, T. & Thomas, J. (1991). *Elements of Information Theory*, Wiley & Sons, Inc., ISBN 0-4710-6259-6, New York, USA.

De Maio, A. & Lops, M. (2007). Design Principles of MIMO Radar Detectors. *IEEE Transactions on Aerospace and Electronic Systems*, Vol. AES-43, No. 3, pp. 886-898, ISSN 0018-9251.

Fishler, E. et al. (2006). Spatial Diversity in Radars – Models and Detection Performance. *IEEE Transactions on Signal Processing*, Vol. SP-54, No. 3, pp. 823-838, ISNN 1053-587X.

Foschini, G. (1996). Layered Space-Time Architecture for Wireless Communication in a Fading Environment Using Multi-Element Antennas. *BLTJ,* Vol. 1, No. 2, pp. 41-59, ISSN 1538-7305.

Golub, G. & Van Loan, C. (1996). *Matrix Computations*, 3rd Ed. The John Hopkins Press, ISBN 0-8018-5414-8, Baltimore, MD, USA.

Kassam, S. (1988), *Signal Detection in Non-Gaussian Noise*, Springer-Verlag, ISBN 0-3879-6680-3, New York, USA.

Kassam, S. & Poor, H. (1985). Robust Technique for Signal Processing: A Survey. *Proceedings IEEE*, Vol. 73, No. pp. 433-481, ISNN 0018-9219.

Kuruoglu, E. et al. (1998). Near Optimal Detection of Signals in Impulsive Noise modelled with a Symmetric α-Stable Distribution. *IEEE Communications Letters*, Vol. 2, No. 10, pp. 282-284.

Lombardo, P et all. (1999). MRC Performance for Binary Signals in Nakagami Fading with General Branch Correlation. *IEEE Transactions on Communications*, Vol. COM-47, No. 1, pp. 44-52, ISSN 0096-1965.

Matthews, J. (1992). Eigenvalues and Troposcatter Multipath Analysis, *IEEE Journal of Selected Areas in Communications*, Vol. 10, No. 4, pp. 497-505, ISNN 0733-8716.

Middleton, D. (1999). New Physical-Statistical Methods and Models for Clutter and Reverberation: The KA-Distribution and Related Probability Structures. *IEEE Journal of Oceanic Engineering*, Vol. 24, No. 7, pp. 261-284, ISSN 0364-9059.

Poor, H. (1988). *An Introduction to Signal Detection and Estimation*. Springer-Verlag, ISBN 0-3879-4173-8, New York, USA.

Proakis, J. (2007), *Digital Communications*, 5th Ed. McGraw-Hill, ISBN 0-0729-5716-6, New York, USA.

Sangston, K. & Gerlach, K. (1994). Coherent Detection of Radar Targets in a Non-Gaussian Background. *IEEE Transactions on Aerospace and Electronic Systems*, Vol. AES-30, No. 4, pp. 330-334, ISSN 0018-9251.

Skolnik, M. (2008). *Radar Handbook*, 3rd Ed. McGraw-Hill, ISBN 978-0-07-148547-0, New York, USA

Sousa, E. (1990). Interference Modelling in a Direct-Sequence Spread-Spectrum Packet Radio Network. *IEEE Transactions on Communications*, Vol. COM-38, No. 9, pp. 1475-1482, ISSN 0096-1965.

Tuzlukov, V. (1998). A New Approach to Signal Detection Theory. *Digital Signal Processing,* Vol. 8, No. 3, pp. 166-184, ISSN 1051-2204

Tuzlukov, V. (1998), *Signal Processing in Noise: A New Methodology*, IEC, ISBN 985-6453-16-X, Minsk, Belarus

Tuzlukov, V. (2001), *Signal Detection Theory*, Springer-Verlag, ISBN 0-8176-4152-1, New York, USA

Tuzlukov, V. (2002), *Signal Processing Noise*, CRC Press, Taylor & Francis Group, ISBN 0-8493-1025—3, Boca Raton, USA

Tuzlukov, V. (2005), *Signal and Image Processing in Navigational Systems*, CRC Press, Taylor & Francis Group, ISBN 0-8493-1598-0, Boca Raton, USA

Tuzlukov, V. (2012), *Signal Processing in Radar Systems*, CRC Press, Taylor & Francis Group, ISBN 0-8493-….-.., Boca Raton, USA (in press).

Van Trees, H. (2003), *Detection, Estimation, and Modulation Theory*. 2nd Ed. Wiley & Sons, Inc., ISBN 978-0-471-44967-6, New York, USA.

Webster, R. (1993), Ambient Noise Statistics. *IEEE Transactions on Signal Processing*, Vol. SP-41, No. 6, pp. 2249-2253, ISNN 1053-587X.

Yao, K. (1973). A Representation Theorem and Its Applications to Spherically Invariant Random Processes. *IEEE Transactions on Information Theory*, Vol. IT-19, No. 7-8, pp. 151-155, ISNN 0018-9448.

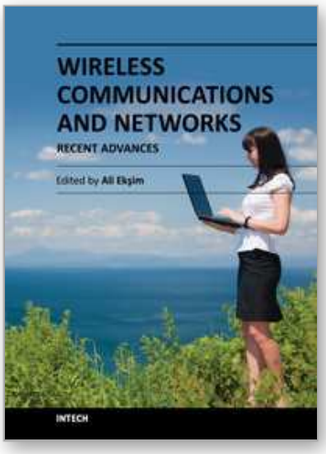

Wireless Communications and Networks - Recent Advances

Edited by Dr. Ali Eksim

ISBN 978-953-51-0189-5

Hard cover, 596 pages

Publisher InTech

Published online 14, March, 2012

Published in print edition March, 2012

This book will provide a comprehensive technical guide covering fundamentals, recent advances and open issues in wireless communications and networks to the readers. The objective of the book is to serve as a valuable reference for students, educators, scientists, faculty members, researchers, engineers and research strategists in these rapidly evolving fields and to encourage them to actively explore these broad, exciting and rapidly evolving research areas.

How to reference

In order to correctly reference this scholarly work, feel free to copy and paste the following:

Vyacheslav Tuzlukov (2012). Generalized Approach to Signal Processing in Wireless Communications: The Main Aspects and some Examples, Wireless Communications and Networks - Recent Advances, Dr. Ali Eksim (Ed.), ISBN: 978-953-51-0189-5, InTech, Available from: http://www.intechopen.com/books/wireless-communications-and-networks-recent-advances/generalized-approach-to-signal-processing-in-wireless-communications-the-main-aspects-and-some-examp

INTECH
open science | open minds

InTech Europe
University Campus STeP Ri
Slavka Krautzeka 83/A
51000 Rijeka, Croatia
Phone: +385 (51) 770 447
Fax: +385 (51) 686 166
www.intechopen.com

InTech China
Unit 405, Office Block, Hotel Equatorial Shanghai
No.65, Yan An Road (West), Shanghai, 200040, China
中国上海市延安西路65号上海国际贵都大饭店办公楼405单元
Phone: +86-21-62489820
Fax: +86-21-62489821

© 2012 The Author(s). Licensee IntechOpen. This is an open access article distributed under the terms of the Creative Commons Attribution 3.0 License, which permits unrestricted use, distribution, and reproduction in any medium, provided the original work is properly cited.